HANSA
HEIZTECHNIK
Hansa Öl- und Gasbrenner GmbH

Efficient Heating systems,
energy solutions
from a reliable source.

Price list

Issue March 2019

www.hansa-heiztechnik.de

Welcome to HANSA!

HANSA oil- und Gasbrenner GmbH has always been among Europe's healthiest and most competitive manufacturers for heating technology. Looking back more than 60 year company history, we have always attached great importance to the development and quality of our products. Our team constantly strives to develop on the basis of efficiency and environmental awareness, customer proximity and service, and even in the future we will focus on an optimal price-performance ratio of our products.

Kindly visit us on the Internet at www.hansa-heiztechnik.de on our corporate website. Apart from information about us and our company, you can also find everything you need to know about our product range and new products from our company.

Just have a look!

Hansa oil- und Gasbrenner GmbH
Burgdamm 3
D-27404 Rhade

Phone: +49 (0) 42 85 93 07-0
Fax: +49 (0) 42 85 93 07-30
E-Mail: info@hansa-heiztechnik.de
Internet: www.hansa-heiztechnik.de

Opening hours:
October - March
Mo – Thu: 7.30 – 17.00 hours
Fri: 7.30 – 16.00 hours

April - September
Mo – Thu: 7.30 – 17.00 hours
Fri: 7.30 – 12.00 hours

Urgent technical enquiries outside office hours: Phone: +49 (0) 42 85 93 07-10

© 2019 Hansa oil- und Gasbrenner GmbH. Subject to typographical errors and modifications of any kind.
We do not assume any responsibility for the correctness of the technical data. All prices are in Euro plus statutory VAT. The prices are to be used as basis for the calculation for specialist dealers and specialist trade. They are not intended for end customers. This price list renders void the validity of all previous price lists. Reprinting and copying - even partially - is not permitted.

Table of Contents

gas condensing boiler
PEGA 18/25/40 | TANTUM 25 — Page 04 - 25 — 1

Heating appliance (gas-fired circulatory type water heater)
HANSA HKS 21.0 Nox — Page 26 - 27 — 2

gas/oil condensing boiler, low-temperature heating boiler
Integra | SND — Page 28 - 41 — 3

Flue gas systems
for oil and gas condensing boilers — Page 42 - 55 — 4

oil-/gas burners
Blue/yellow flame burners | gas burners — Page 56 - 63 — 5

Solar systems
Flat collectors | Solar packages | Accessories — Page 64 - 65 — 6

Hot water cylinders
Hot water cylinders | water tanks — Page 66 - 67 — 7

Spare parts
Various product groups — Page 68 - 81 — 8

Appendix
Terms of delivery and payment — Page 82 - 83 — 9

PEGA – high-quality and first-class

The compact PEGA series of gas condensing devices has long set standards in terms of efficiency, convenience and flexibility. The latest generation continues the tradition with a new design. PEGA is available in various versions and power levels in the customary configuration. Outputs ranging from 1.8 - 40 kW and its one-of-a-kind modulation fulfil every wish.

The PEGA gas condensing device from HANSA meets the highest demands in terms of heat generation and water heating.

The heat exchanger was developed by HANSA itself and has proven its effectiveness for years. In addition to its efficiency, it also doesn't leave behind any residue and no extra agents are needed.

5 years warranty on the heat exchanger

» Stainless steel heat exchanger – long-lived and efficient

Advantages at a glance

- Unparalled output range from 1.8 - 40 kW
- Maximum modulation range 1:20
- Hot water output as a combi-device: 15 l/min at 55 °C
- High-quality, long-lived HANSA stainless steel heat exchanger
- Incl. weather-compensated control
- Compact dimensions
- Quiet operation at the lowest outputn
- Easily accessible due to removable side panels
- Convenient maintenance and as a result, reduced maintenance costs
- Installation of high-quality components – Made in Germany

More details on the current subsidy schemes can be found at: www.BAFA.de and www.Kfw.de

Technical data

Model	PEGA 25_18 heating device	PEGA 25_18 combi device	PEGA 25 heating device	PEGA 25 combi device	PEGA 40 heating device	PEGA 40 combi device
gas device category DE	II_{2ELL3P}	II_{2ELL3P}	II_{2ELL3P}	II_{2ELL3P}	$II_{2ELL3B/P}$	$II_{2ELL3B/P}$
Product ID number	CE-0085BT0288	CE-0085BT0288	CE-0085BT0288	CE-0085BT0288	CE-0085BT0288	CE-0085BT0288
Boiler heat output range in kW, 50/30 °C	2,2 - 19,1	2,2 - 19,1	2,2 - 26,1	2,2 - 26,1	3,8 - 38	3,8 - 38
Boiler heat output range in kW, 80/60 °C	1,9 - 17,2	1,9 - 17,2	1,9 - 24,2	1,9 - 24,2	3,4 - 35,6	3,4 - 35,6
Boiler heat output range in kW	2,0 - 18	2,0 - 18	2,0 - 25	2,0 - 25	3,5 - 36,6	3,5 - 36,6
Efficiency rated output 80/60 °C in %	96,72	96,72	96,72	96,72	97,25	97,25
Efficiency 0.3 x rated output, 30 °C in %	110,01	110,01	110,01	110,01	107,65	107,65
Energy efficiency in accordance with efficiency directive	****	****	****	****	****	****
NOx - class	5	5	5	5	5	5
Room heating energy efficiency class	A	A	A	A	A	A
XXL hot water energy efficiency class	–	A	–	A	–	A
Incoming air flue gas connection (diameter) in mm	80 / 125	80 / 125	80 / 125	80 / 125	80 / 125	80 / 125
Type of flue gas discharge	B23, C13x, C33x, C43x, C53x, C63x, C83x					
Dimensions (height / width / depth) in mm	750 / 400 / 325	750 / 400 / 325	750 / 400 / 325	750 / 400 / 325	750 / 400 / 325	750 / 400 / 325
Boiler weight in kg	45	45	45	45	45	45
Heating flow/return connection (male thread)	G ¾", flat sealing					
Cold and hot water connection (male thread)	–	G ½"	–	G ½"	–	G ½"
Flow/return tank (male thread)	G ½"	–	G ½"	–	G ½"	–
gas connection (male thread)	R ¾", conical	R ¾", conical	R ¾", conical	R ¾", conical	R ¾", conical	R ¾", conical
Condensate drain	¾"	¾"	¾"	¾"	¾"	¾"
max. operating pressure in bar	3	3	3	3	3	3
max. drinking water pressure in bar	–	10	–		–	10
max. permissible drinking water hardness in mol/m³	–	2,7*	–	2,7*	–	2,7*
max. drinking water rated output in kW	–	25	–	25**	–	36,6
Hot drinking water continuous output (Δt=35K in l/min)	–	10,2	–	10,2	–	15
Flue gas mass flow rate (max.) in g/s	12,4	12,4	12,4	12,4	18,2	18,2
Pressure flue gas side in Pa	220	220	220	220	220	220
Normal flue gas temperature in °C	76	76	76	76	76	76
Electrical connection (VAC / Hz)	230 / 50	230 / 50	230 / 50	230 / 50	230 / 50	230 / 50
max. electrical power consumption in W	130	130	130	130	130	130

* corresponds to 15°dH or 27°fH or 19°e
** Hot water output

Individual devices

Series PEGA 18/25/40 - gas condensing boilers	Energy efficiency class	Order no.	Price/€
PEGA 25_18 Combi with high-output pump	A XXL A	1000329	3,305.00
PEGA 25_18 gas heating device with high-output pump	A	1000328	3,197.00
PEGA 25 Combi with high-output pump	A XXL A	1000336	3,429.00
PEGA 25 gas heating device with high-output pump	A	1000334	3,321.00
PEGA 40 Combi with high-output pump	A XXL A	1000331	3,562.00
PEGA 40 gas heating device with high-output pump	A	1000330	3,454.00

Storage tank for installation under boiler – storage for drinking water

Model – Storage tank	Energy efficiency class	Order no.	Price/€
TUW-E 120 litre	C	1001079	775.00
TUW-E 160 litre	C	1001076	985.00

More boilers: see chapter 7, page 66 - 67

Gas combi devices & accessories

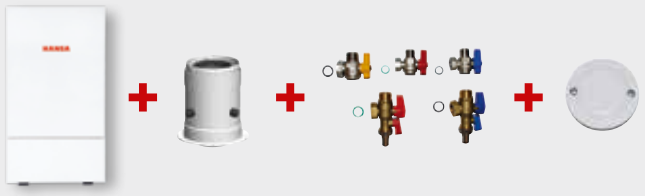

+ boiler fitting
+ ball valve fitting set
+ outdoor sensor

Model	Energy efficiency class	Order no.	Price/€
PEGA 25_18 Combi with high-output pump	A XXL A	1000437	Pack./ price 3,565.00
PEGA 25 Combi with high-output pump	A XXL A	1000447	Pack./ price 3,565.00
PEGA 40 Combi with high-output pump	A XXL A	1000441	Pack./ price 3,565.00

* also available with continuity taps.
(PEGA 25_18 – 1000434 | PEGA 25 – 1000446 | PEGA 40 – 1000440)

Gas heating devices & accessories

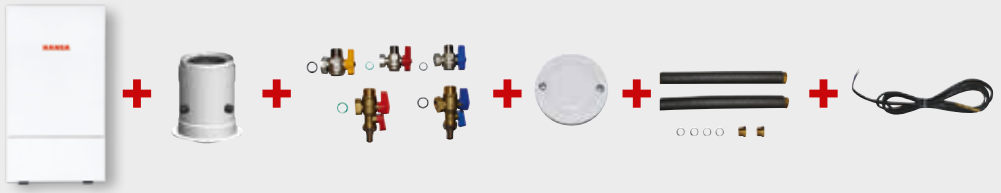

+ boiler fitting
+ ball valve fitting set
+ outdoor sensor
+ connection PEGA 40
+ cylinder sensor

Model	Energy efficiency class	Order no.	Preis/
PEGA 25_18 gas heating device with high-output pump	A	1000436	Paketpreis 3,455.00
PEGA 25 gas heating device with high-output pump	A	1000443	Paketpreis 3,455.00
PEGA 40 gas heating device with high-output pump	A	1000438	Paketpreis 3,455.00

* also available with continuity taps.
(PEGA 25_18 – 1003379 | PEGA 25 – 1003380 | PEGA 40 – 1000439)

Packages PEGA gas heating devices with storage tank

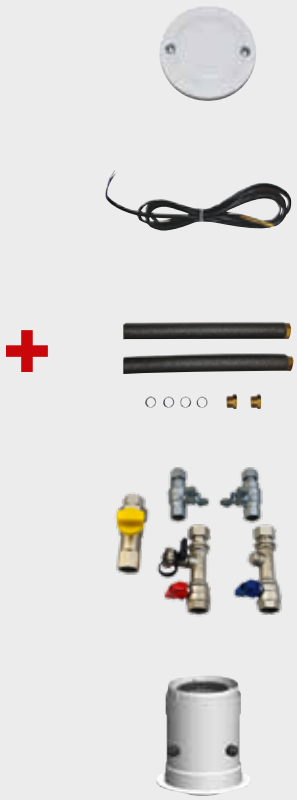

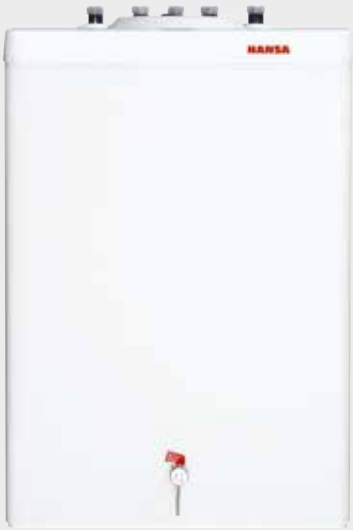

(storage tank 120, 160, 200, 300 litre – more details see page 66-67)

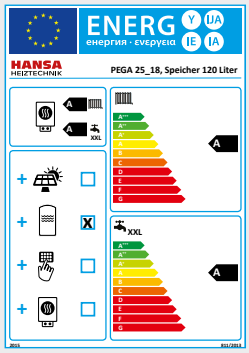

Package content

- PEGA 18/25/40 gas condensing boiler heating device with high-output pump
- Outdoor sensor
- Storage tank (120, 160, 200 or 300 litre)
- Cylinder sensor
- Boiler fitting
- Ball valve fitting set
- Connection PEGA

Packages PEGA 25_18 gas heating devices with storage tank

Package	Storage tank	Energy efficiency class	Order no.	Price/€
PEGA 25_18 gas heating device with storage tank	120 litre	System A XL A	1002934	4,000.00
PEGA 25_18 gas heating device with storage tank	160 litre	System A XL A	1002935	4,100.00
PEGA 25_18 gas heating device with storage tank	200 litre	System A XL A	1002936	4,200.00

Packages PEGA 25 gas heating devices with storage tank

Package	Storage tank	Energy efficiency class	Order no.	Price/€
PEGA 25 gas heating device with storage tank	120 litre	System A XL A	1002937	4,000.00
PEGA 25 gas heating device with storage tank	160 litre	System A XL A	1002938	4,100.00
PEGA 25 gas heating device with storage tank	200 litre	System A XL A	1002939	4,200.00

Packages PEGA 40 gas heating devices with storage tank

Package	Storage tank	Energy efficiency class	Order no.	Price/€
PEGA 40 gas heating device with storage tank	160 litre	System A XL A	1002940	4,150.00
PEGA 40 gas heating device with storage tank	200 litre	System A XL A	1002941	4,250.00
PEGA 40 gas heating device with storage tank	300 litre	System A XL A	1002942	4,400.00

Packages PEGA gas heating devices with solar storage tank

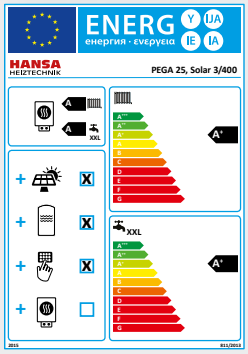

Solar packages
(2,3,5 or 6 collectors –
more details see page 64)

Storage tank
(300, 400, 825, 1000 litre –
more details see page 66-67)

Package content

- PEGA 25/40 gas condensing boiler heating device with high-output pump
- Outdoor sensor
- Solar station (technical datas see page 65)
- Cylinder sensor
- Boiler fitting
- Ball valve fitting set
- Connection PEGA
- Solar package (2,3,5 or 6 collectors)
- Storage tank (300, 400, 825 or 1000 litre)

Technical data

Model	2/000	3/000	5/000	6/000
Number of collectors	2	3	5	6
Gross collector surface	4,12 m²	6,18 m²	10,30 m²	12,36 m²
Absorber surface	3,80 m²	5,70 m²	9,50 m²	11,4 m²
Piping	Mäander 2x connection	Mäander 2x connection	Mäander 2x connection	Mäander 2x connection
Connections	12 mm	12 mm	12 mm	12 mm
Max. Operating pressure	10 bar	10 bar	10 bar	10 bar
Solar expansion vessel	25 l	25 l	25 l	25 l
Anti-freeze concentrate	20 kg	20 kg	40 kg	40 kg
Absorber material	Cooper	Cooper	Cooper	Cooper
weight per collector	35 kg	35 kg	35 kg	35 kg

Packages PEGA 25 / 40 gas heating devices with solar storage tank

Package	Storage tank	Collectors	Energy efficiency class	Order no.	Price/€
PEGA 25 with solar package 2/300	300 litre	2	System A / XL A+	1002947	6,910.00
PEGA 25 with solar package 3/400	400 litre	3	System A / XL A++	1002948	7,990.00
PEGA 25 with solar package 5/825	825 litre	5	System A+ / XL A++	1002949	11,230.00
PEGA 40 with solar package 6/1000	1.000 litre	6	System A+ / XL A++	1002950	13,500.00

Accessories

	Model	PEGA 25_18 Combi	PEGA 25_18 Heater	PEGA 25 Combi	PEGA 25 Heater	PEGA 40 Combi	PEGA 40 Heater	Order no.	Price/€
	Boiler fitting concentric, DN80/125, straight type	X	X	X	X	X	X	1000361	52.20
	Boiler fitting concentric, DN80/125, 87° elbow	X	X	X	X	X	X	1001918	84.00
	Fitting set PEGA 40 Consisting of two corrugated pipes 340 mm, two reducers ¾"–½" and four gaskets ¾"	—	X	—	X	—	X	1000411	67.50
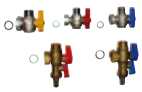	Ball valve fitting set PEGA 40 3 way ball valve for simultaneous emptying of the heater	X	X	X	X	X	X	1002526	83.30
	Ball valve fitting set PEGA as straight + drinking water approval	X	X	X	X	X	X	1002528	184.75
	Storage tank sensor For the detection of the storage tank temperature.	—	X	—	X	—	X	1001803	16.80
	Theta N 23BVVC-OT ZG For the weather-compensated control of one mixer circuit and one storage circuit.	X	X	X	X	X	X	1001794	737.00
	Theta N 2233BVVC-OT ZG For the weather-compensated control of two mixer circuits and one storage circuit.	X	X	X	X	X	X	1001795	783.00
	Wall bracket WG 500 Wall bracket without control. Pre-wired and ready for use with controls of the Theta standard series.	X	X	X	X	X	X	1001779	355.00
	Flow sensor VF 202 For Theta controls. One flow sensor required per mixer circuit.	X	X	X	X	X	X	1001767	31.50

Accessories

	Model	PEGA 25_18 Combi	PEGA 25_18 Heater	PEGA 25 Combi	PEGA 25 Heater	PEGA 40 Combi	PEGA 40 Heater	Order no.	Price/€
	Room unit RSC-OT The room unit offers plain text operation and room temperature recording in one.	X	—	X	—	X	—	1001793	350.00
	CETA 104 Heating controller for single-stage or modulating heat generators (OpenTherm), direct heating circuit and hot water, incl. outdoor sensor and 2 boiler sensors	X	X	X	X	X	X	1001798	285.00
	CETA 106 Heating controller for mixer heating circuit Differential temperature control, incl. outdoor sensor and flow sensor	X	X	X	X	X	X	1001799	263.25
	CETA 107 Room unit OT bus, expansion of mixed heating circuit and direct heating circuit, including pre-flow sensor	X	X	X	X	X	X	1003456	527.65
	Hydraulic separator This hydraulic separator is adjusted to the following PEGA: Size DN 80/120, nominal size DN40, connecting socket G 1 ½", flow rate 4 m³/h, capacity 44 kW (for Dt =10 K), max. permissible operating temperature +110°C, minimum permissible operating temperature -20°C, max. permissible operating pressure 6 bar	X	X	X	X	X	X	1002678	461.90
	Diagnostic cable with software programme	X	X	X	X	X	X	1000393	385.00
	Magnetic filter ¾"	X	X	X	X	X	X	1002677	215.00

Cascade controller on request. Magnetic filter is required.

TANTUM 25 – straightforward quality

The new, compact HANSA TANTUM gas condensing device perfectly accommodates most customer needs in terms of heat and hot water output. The space-saving dimensions mean that the device can be set up even in the smallest of spaces. The device is readily accessible from the front, all parts are clearly arranged and easy to reach. The connections are easy to find and can be plugged together, which prevents installations errors. The control unit features straightforward design and is easy to operate. TANTUM excels when it comes to quality and value for money. The heat exchanger is made of high-quality stainless steel, the components are from reputable manufacturers and it is manufactured in Germany! As a result, HANSA guarantees a long-service life and stability as well as solid technology at a revolutionary price!

Advantages at a glance

- Output range of 4.0 – 24.7 kW
- Modulation range 1:6
- High-quality stainless steel heat exchanger
- Includes a weather-compensated control and expansion vessel
- Compact dimensions
- Quiet operation with sound-proofed housing
- User-friendly mounting and service
- Equipped with high-quality components – Made in Germany

More details on the current subsidy schemes can be found at: www.BAFA.de and www.Kfw.de

Technical data

Model	TANTUM 25 heating device	TANTUM 25 combi device
gas device category DE	II_{2ELL3P}	II_{2ELL3P}
Boiler heat output range in kW, 50/30 °C	4,3 - 23,7	4,3 - 23,7
Boiler heat output range in kW, 80/60 °C	3,8 - 21,1	3,8 - 21,1
Boiler heat output range in kW	4,0 - 22,5	4,0 - 22,5
Efficiency rated output 80/60 °C in %	97,02	97,02
Efficiency 0.3 x rated output, 30 °C in %	108,7	108,7
NOx - class	5	5
Room heating energy efficiency class	A	A
XL hot water energy efficiency class	–	A
Incoming air flue gas connection (diameter) in mm	80 / 125	80 / 125
Type of flue gas discharge	B23, B23P, B33, C13x, C33x, C43x, C53x, C63x, C93x	
Dimensions (height / width / depth) in mm	750 / 400 / 325	750 / 400 / 325
Boiler weight in kg	45	45
Heating flow/return connection (male thread)	G ¾", flat sealing	G ¾", flat sealing
Cold and hot water connection (male thread)	–	G ½"
Flow/return tank (male thread)	G ½"	–
gas connection (male thread)	R ¾", conical	R ¾", conical
Condensate drain	¾"	¾"
max. operating pressure in bar	3	3
max. drinking water pressure in bar	–	10
max. permissible drinking water hardness in mol/m³	–	2,7*
max. drinking water rated output kW	–	4,0 - 24,7
Hot drinking water continuous output (Δt=35K in l/min)	–	10,1
Flue gas mass flow rate (max.) in g/s	11,2	12,3
Pressure flue gas side in Pa	150	150
Normal flue gas temperature in °C	75	75
Electrical connection (VAC / Hz)	230 / 50	230 / 50
max. electrical power consumption in W	90	90

* corresponds to 15°dH or 27°fH or 19°e

Individual devices

TANTUM 25 series - gas condensing boilers	Energy efficiency class	Order no.	Price/€
TANTUM 25 Combi 4,0 - 24,7 kW with high-output pump	A XL A	1003496	2,184.00
TANTUM 25 heating device 4,0 - 24,7 kW with high-output pump	A	1003521	2,099.00

Storage tank for installation under boiler – storage for drinking water

Model – Storage tank	Energy efficiency class	Order no.	Price/€
TUW-E 120 litre	C	1001079	775.00
TUW-E 160 litre	C	1001076	985.00

More boilers: see chapter 7, page 66 - 67

TANTUM 25 gas combi devices & accessories

+ boiler fitting
+ ball valve fitting set
+ outdoor senso

TANTUM 25 Combi device	Energy efficiency class	Order no.	Price/€
TANTUM 25 Combi 4,0-24,7 kW	A XL A	1003522	Paketpreis 2,420.00

TANTUM 25 gas heating device & accessories

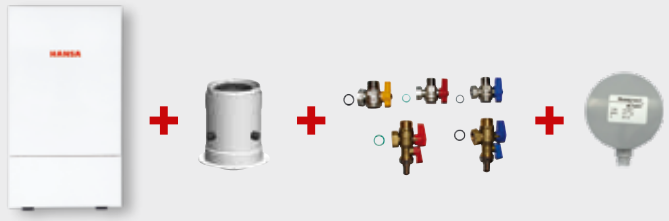

+ boiler fitting
+ ball valve fitting set
+ outdoor sensor

TANTUM 25 heating device	Energy efficiency class	Order no.	Price/€
TANTUM 25 heating device 4,0-24,7 kW	A	1003523	Paketpreis 2,298.00

*also available with continuity taps
(TANTUM 25 – 1004037)

Packages TANTUM 25 gas heating devices with storage tank

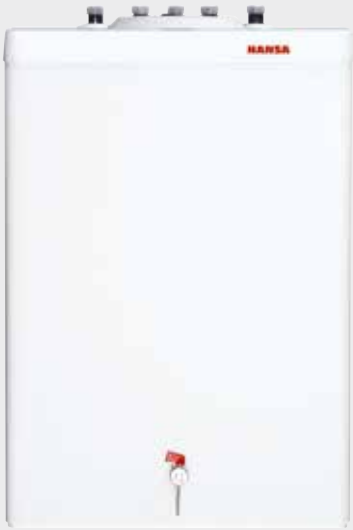

Storage tank
(120, 160, 200 litre –
more details see page 66-67)

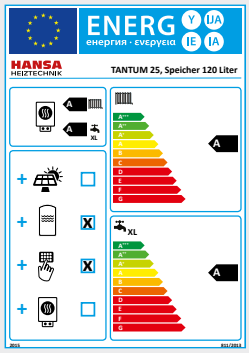

Package content

- TANTUM 25 gas condensing boiler heating device with high-output pump
- Outdoor sensor
- Storage tank (120, 160, 200 or 300 litre)
- Cylinder sensor
- Boiler fitting
- Ball valve fitting set
- Connection TANTUM

TANTUM 25 gas heating device with Storage tank

Packages TANTUM 25 gas heating devices with storage tank	Energy efficiency class	Order no.	Price/€
Storage tank 120 litre	A XL A	1003542	2,990.00
Storage tank 160 litre	A XL A	1003765	3,110.00
Storage tank 200 litre	A XL A	1003942	3,400.00

Packages TANTUM 25 gas heating devices with solar storage tank

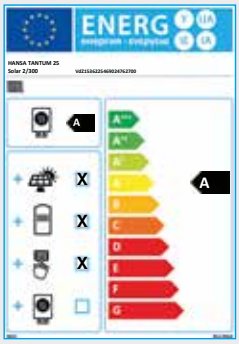

Solar packages
(2,3 or 5 collectors –
more details see page 64)

Storage tank
(300, 400, 825 litre –
more details see page 66-67)

Package content

- TANTUM 25 gas condensing boiler heating device with high-output pump
- Outdoor sensor
- Solar station (technical datas see page 65)
- Cylinder sensor
- Boiler fitting
- Ball valve fitting set
- Connection TANTUM
- Solar package (2,3 or 5 collectors)
- Storage tank (300, 400, 825 litre)

Technical data storage tank

Model	2/000	3/000	5/000
Number of collectors	2	3	5
Gross collector surface	4,12 m²	6,18 m²	10,30 m²
Absorber surface	3,80 m²	5,70 m²	9,50 m²
Piping	Mäander 2x connection	Mäander 2x connection	Mäander 2x connection
Connections	12 mm	12 mm	12 mm
Max. Operating pressure	10 bar	10 bar	10 bar
Solar expansion vessel	25 l	25 l	25 l
Anti-freeze concentrate	20 kg	20 kg	40 kg
Absorber material	Cooper	Cooper	Cooper
weight per collector	35 kg	35 kg	35 kg

Packages TANTUM 25 gas heating devices with solar storage tank

Package	Storage tank	Kollektoren	Energy efficiency class	Order no.	Price/€
TANTUM 25 with solar package 2/300	300 litre	2	System A / XL A+	1003875	5,850.00
TANTUM 25 with solar package 3/400	400 litre	3	System A / XL A++	1003965	6,700.00
TANTUM 25 with solar package 5/825	825 litre	5	System A+ / XL A++	1003966	8,100.00

TANTUM 25 Compact 100 – straight forward quality

The new TANTUM Compact gas condensing unit is the successful extension of the HANSA gas condensing boiler series. In addition to the requirements of modern condensing boiler technology, the convenient hot water supply is characterized by the integrated coiled tube stoarage.
The device is designed very user-friendly and impresses with its clear and slim design, without incidentals. HANSA continues to rely on the use of a high-quality stainless steel heat exchanger and the installation of high-quality components.

Advantages at a glance

- Output range of 4.0 – 24.7 kW
- 100 litre storage volume
- Direct access to the storage for servicing
- Comfortable hot water supply for all water quality
- High-quality stainless steel heat exchanger
- Includes a weather-compensated control and expansion vessel
- Compact dimensions
- User-friendly mounting and service
- Equipped with high-quality components – Made in Germany

TANTUM 25 Compact 100 & accessories

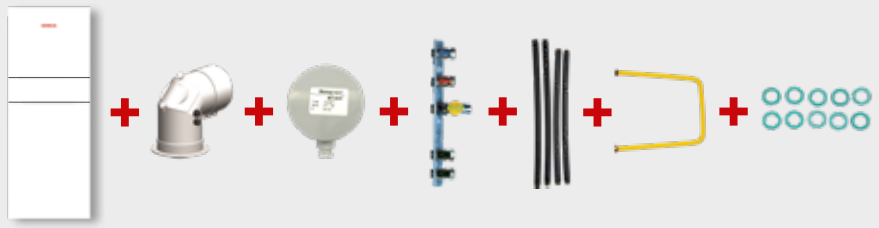

+ Boiler fitting
+ Outdoor sensor
+ Ball valve fitting set incl. hinge
  (Comfortable hot water supply for all water quality, direct access to the storage for maintenance work)
+ connecting line
+ gas connecting line
+ flat seals

TANTUM 25 Compact 100	Energy efficiency class	Order no.	Price/€
TANTUM 25 Compact 100 gas condensing boiler Compact 4,0 - 24,7 kW	A XL A	1003785	Price 4,150.00

Technical data

Type	Tantum 25 Compact 100
gas device category DE	II_{2ELL3P}
Boiler heat output range in kW, 80/60° C	3,8 - 21,1
Boiler heat output range in kW	4,0 - 22,5
Efficiency rated output 80/60°C in %	97,02
Efficiency 0.3 x rated output, 30°C in %	108,7
NOx - class	5
Room heating energy efficiency class	A
XXL hot water energy efficiency class	A
Incoming air flue gas connection (diameter) in mm	80 / 125
Combustion chamber	B23; B23P; B33; C 13x; C33x; C43x; C53x; C63x; C93x
Dimensions (height / width / depth) in mm	1595 / 595 / 635
Boiler weight in kg	134
Heating flow return connection (male thread)	G ¾", flat sealing
Cold and hot water connection (male thread)	G 3/4"
gas connection (male thread)	R ¾", conical
Condensate drain	¾"
max. operating pressure in bar	3
max. drinking water pressure in bar	6
max. permissible drinking water hardness in mol/m³	–
max. drinking water rated output kW	4,0 - 24,7
Trinkwarmwasser-Erstzapfrate in l 45° C/55° C/12l/min	168**
Trinkwarmwasser-Erstzapfrate in l 45° C/60° C/12l/min	240**
Drinking water continuous output at Dt=35K in l/min	6
Flue gas mass flow rate (max.) in g/s	11,2
Pressure flue gas side in Pa	120
Normal flue gas temperature in °C	71
Electric connection	230 / 50
max. electrical power consumption in W	74

**hot water spigot temperature/storage tank charging temperature/peg rate

Accessories

	Model	TANTUM 25 Heater	TANTUM 25 Combi	TANTUM 25 Compact 100	Order no.	Price/€
	Boiler fitting concentric, DN80/125, straight type	X	X	X	1000361	52.20
	Boiler fitting concentric, DN80/125, 87° elbow	X	X	X	1001918	84.00
	Fitting TANTUM Consisting oft wo corrugated pipes 340 mm, two reducers ¾"– ½" and four gaskets ¾"	X	X	—	1000411	67.50
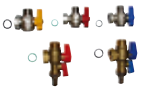	Ball valve fitting set TANTUM 3 way ball valve for simultaneous empyting of the heater	X	X	—	1002526	83.30
	Ball valve fitting set TANTUM as straight + drinking water approval	X	X	—	1002528	184.75
	Storage tank sensor – for the detection of the storage tank temperature	X	X	—	1001529	24.15
	Necessary accessories for the time control of the heating system.					
	Room thermostat CMR 737 Installation in the living room. The heating operation is weather-compensated depending on the recorded room temperature. Room influence can not be switched off.	X	X	X	1003516	145.00
	Room thermostat T1 (analogue), 4 adjustable temperature levels, optional remote control via telephone, frost protection function. Installation in the living room. Heating operation is done by fixed value depending on the recorded room temperature. Room influence can not be switched off.	X	X	X	1002604	198.00
	Room unit RSC-OT The room unit offers plain text operation and room temperature recording in one. Installation near to the gas-condensing device in the boiler room is possible. Room temperature influence can be switched on and off.	X	X	X	1001793	350.00

Accessories

	Model	TANTUM 25 Heater	TANTUM 25 Combi	TANTUM 25 Compact 100	Order no.	Price/€
	CETA 104 Heating controller for single-stage or modulating heat generators (OpenTherm), direct heating circuit and hot water, incl. outdoor sensor and 2 boiler sensors	X	X	X	1001798	285.00
	CETA 106 Heating controller for mixer heating circuit Differential temperature control, incl. outdoor sensor and flow sensor	X	X	X	1001799	263.25
	CETA 107 Room unit OT bus, expansion of mixed heating circuit and direct heating circuit, including pre-flow sensor	X	X	X	1003456	527.65
	Hydraulic separator TANTUM This hydraulic separator is adjusted to the following TANTUM: Size DN 80/120, nominal size DN40, connecting socket G 1 ½", flow rate 4 m³/h, capacity 44 kW (for Dt =10 K), max. permissible operating temperature +110°C, minimum permissible operating temperature -20°C, max. permissible operating pressure 6 bar	X	X	—	1002678	461.90
	Magnetic filter ¾"	X	X	X	1002677	215.00
	Inhibitor, inhibits boilers and corrosion of all types, 0,5 l bottle is sufficient for 100 l heating water	X	X	X	1002676	46.30
	Cleaner for heating systems, for the commissioning of new systems or as a sludge cutter, 0,5 l bottle is sufficient for 100 l heating water	X	X	X	1002675	49.60

HKS 21.0 NOX
(gas-fired circulatory type water heater)

Compact heater for easy device replacement in any installation situation, NOX reduced with electric ignition and weather-compensated control.

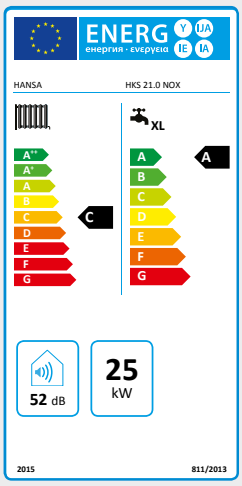

Example: package 1002965

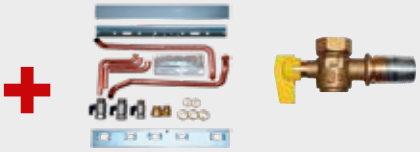

Package content

- HKS Combi/Chimney (13,3 – 26 kW)
- Hydraulic kit adapter set
- gas tap with safety fuse

Advantages at a glance

- Water-cooled stainless steel burner LOW NOX extremely emission-reduced
- Hot water stainless steel plate heat exchanger (sanitary)
- Weather-compensated control included
- Fast and easy installation
- Integrated safety valve and expansion vessel
- High standard efficiency up 94%
- Deferred pump shut-down + pump running time can be set!
- gas-Überwachung – elektronisch gesteuert
- Anti-cycling mode system
- Unterstützung durch Open Therm
- Expansion Vessel 8 ltr.
- Operating status with digital display
- EN rules 92/42/EEC *** proofed

HKS individual device

HANSA HKS / individual device	Energy efficiency class	Order no.	Price/€
HKS 21.0 NOX Combi/Chimney	C / XL A	1003036	1,999.00

HKS / Packages

HANSA HKS / Package	Im Paket enthalten	Energy efficiency class	Order no.	Price/€
HKS 21.0 NOX Combi/Chimney Economy package	+ Hydraulic kit adapter set + gas tap with safety fuse	SYSTEM C / XL A	1002965	2,199.00

Accessories

	Accessories HKS	Order no.	Price/€
	Hydraulic kit for HKS	1000130	141.00
	Adapter set for Vaillant boilers	1000132	271.95
	gas tap with safety fuse ¾" + ¾"	1002538	33.40
	Room unit RSC-OT	1001793	350.00
	Room thermostat T1 (analogue), 4 adjustable temperature levels, optional remote control via telephone, frost protection function	1002604	198.00
	Outdoor sensor for boilers	1000159	55.00

Integra 36/60 series – condensing boilers for oil and gas (14-55 kW)

» Integra gas/oil condensing boiler with unit hood and base.

The solid condensing boilers of the HANSA Integra series have proven themselves on the market and offer long-lasting, sustainable heating technology – for a wide range of applications. Whether for oil or gas burning, modernisation or a new buildings, with or without a horizontal tank, the Integra condensing boilers can be combined in a variety of ways making them the perfect solution for 99 % of all homes.

The Integra condensing boilers are equipped with long-lasting high-output cast iron boiler units and a high-quality downstream stainless steel heat exchanger from HANSA. Thanks to the high purity stainless steel alloy, the heat exchanger is highly corrosion resistant and durable.

The scope of delivery also includes a weather-compensated, 2-point control, panelling with insulation, safety temperature limiter and safety group.

Optionally, A.) Siemens or B.) EBV control can be selected for the units. Reliable oil burners (blue burners) or gas forced-air burn burners complete the package.

A.)

B.)

As standard, the devices are equipped for room-air-dependent operation, but are also available with air-independent operation (up to 41.3 kW).

The boilers are available with the following output ranges:
Optionally, the units are equipped with a base, unit hood or horizontal tank. The painstaking workmanship guarantees a long service life.
Comfortable warmth – Made in Germany!

- 14,3 - 22,0 kW - Integra 36_19
- 23,8 - 27,5 kW - Integra 36_25
- 28,6 - 33,0 kW - Integra 36_31
- 35,8 - 41,3 kW - Integra 60_37
- 40,5 - 46,8 kW - Integra 60_44
- 47,7 - 55,1 kW - Integra 60_52

» Integra gas/oil condensing boiler with unit hood and horizontal tank

Advantages at a glance

- Long-lasting, high-output cast iron boiler units
- High-quality HANSA stainless steel heat exchanger
- Reliable oiler burners (blue burners) or gas forced-air burners
- Optionally equipped with a weather-compensated control (Siemens or EBV)
- Submersible safety thermostat and safety group included

More details on the current subsidy schemes can be found at:
www.BAFA.de and www.Kfw.de

Technical data

Model	INTEGRA					
	36_19	36_25	36_31	60_37	60_44	60_52
Output in kW	19	25	31	37	44	52
Product ID number	CE-0035 CO 102			CE-0035 CO 103		
Oil burner[5]	HBU 21_20	HBU 21_26	HBU 40_33	HBU 40_38	HBU 50_47	HBU 50_52
Steinen oil nozzle	ST 80° 0,40gph	ST 80° 0,50gph	S 80° 0,60gph	S 80° 0,75gph	S 80° 0,85gph	S 80° 1,00gph
Boiler heat output range in kW, 50/30° C	14,8 - 23	24,3 - 28,5	29,1 - 34	36,3 - 42,3	41 - 47,8	48,2 - 56,1
Boiler heat output range in kW, 80/60° C	13,3 - 20	22,8 - 25,5	27,6 - 31	34,3 - 39,3	38,5 - 44,8	45,7 - 53,1
Boiler heat output range in kW	14,3[1] - 22	23,8 - 27,5	28,6 - 33	35,8 - 41,3	40,5 - 46,8	47,7 - 55,1
Efficiency rated output 80/60°C in %	98,2			96,6		
Efficiency rated output 50/30°C in %	102,1			100,2		
Efficiency 0.3 x rated output, 40°C in %	103,0			101,6		
NOx - class	5			5		
Room heating energy efficiency class	A					
Combustion chamber[3]	B23, C43, C63			B23, C43, C63	B23	
Supply air-flue gas pipe diameter in mm	80/125			110/150		
Connection height flue gas nozzle with horizontal storage / base / feet in mm"	1685[2] / 1435[2] / 1135[2]			- / 1445[2] / 1145[2]		
Boiler height with horizontal storage/base/feet in mm"	1435 / 1185 / 885			- / 1185 / 885		
Boiler depth in mm with/without unit hood	1050 / 735			1250 / 935		
Boiler width in mm	600			600		
Boiler weight in kg	136			166		
Boiler water content in ltr.	12,8			20,8		
Water content of flue gas heat exchanger in ltr.	1,9			2,8		
Resistance on heating-gas end in mbar	0,42			1		
Front-return connection (internal thread)	1''			1''		
max. operating pressure in bar	3					
Flue gas mass flow rate (max.) in g/s	14,89			25,66		
Pressure flue gas side in Pa	22			22		
Nominal flue gas temperature in °C	60,1			89,5		
Electrical connection (VAC / Hz)	1, N, PE / 230V, 50Hz					
Fuse	F6A					

Horizontal tank	TS 150
Horizontal tank capacity in ltr.	150
Continuous output 80/45/10 ltr./h	598
Continuous output 60/45/10 ltr./h	-
Front-return boiler connection (internal thread)	1''
Hot-cold water (outer thread)	3/4"

Horizontal tank	TS 150
Tank weight in kg	95
Tank height including feet in mm	575
Tank width in mm	600
Tank length in mm	1030
max. operating pressure in bar	10

1) with oil nozzle ST 75° 0.30gph
2) Flue pipe middle
3) B = room-air dependent (RLA);
C = non room-air dependent (RLU)4)
5) gas burner: INTEGRA I 36:
HSP 1 E/F (20kW-36kW);
INTEGRA 60:
HSP 1 E/F (30kW - 70kW)

Individual devices with accessories

HANSA Integra floorstanding condensing boiler with accessories
+ ingot + pannelling + weather-compensated control (incl. sensor) except flow sensor (extra large)
+ 1-stage burner + submersible safety thermostat + boiler fitting
+ stainless steel heat exchanger up to to 40 kW or 70 kW

Individual devices with accessories	36_19	36_25	36_31	60_37	60_44	60_52
Output in kW	14,3 - 22,0	23,8 - 27,5	28,6 - 33,0	35,8 - 41,3	40,5 - 46,8	47,7 - 55,1
oil A	1003967	1003968	1003969	1003970	1003971	1003972
gas B	1003973	1003974	1003975	1003976	1003977	1003978
Price/€	4,630.00	4,780.00	4,950.00	5,180.00	5,500.00	6,000.00

HANSA Integra floorstanding condensing boiler with accessories and base
+ ingot + pannelling + weather-compensated control (incl. sensor) except flow sensor (extra large)
+ 1-stage burner + submersible safety thermostat + boiler fitting
+ stainless steel heat exchanger up to to 40 kW or 70 kW + 30 cm base

Individual devices with accessories	36_19	36_25	36_31	60_37	60_44	60_52
Output in kW	14,3 - 22,0	23,8 - 27,5	28,6 - 33,0	35,8 - 41,3	40,5 - 46,8	47,7 - 55,1
oil A	1003979	1003980	1003981	1003982	1003983	1003984
gas B	1003985	1003986	1003987	1003988	1003989	1003990
Price/€	4,835.00	4,985.00	5,155.00	5,385.00	5,705.00	6,205.00

HANSA Integra floorstanding condensing boiler with accessories and unit hood
+ ingot + pannelling + weather-compensated control (incl. sensor) except flow sensor (extra large)
+ 1-stage burner + submersible safety thermostat + boiler fitting
+ stainless steel heat exchanger up to to 40 kW or 70 kW + unit hood

Individual devices with accessories	36_19	36_25	36_31	60_37	60_44	60_52
Output in kW	14,3 - 22,0	23,8 - 27,5	28,6 - 33,0	35,8 - 41,3	40,5 - 46,8	47,7 - 55,1
oil A	1003991	1003992	1003993	1003994	1003995	1003996
gas B	1003997	1003998	1003999	1004000	1004001	1004002
Price/€	4,840.00	4,990.00	5,160.00	5,390.00	5,710.00	6,210.00

Individual devices with accessories

HANSA Integra floorstanding condensing boiler with accessories, base and unit hood
+ ingot + pannelling + weather-compensated control (incl. sensor) except flow sensor (extra large)
+ 1-stage burner + submersible safety thermostat + boiler fitting
+ stainless steel heat exchanger up to to 40 kW or 70 kW + 30 cm base + unit hood

Individual devices with accessories	36_19	36_25	36_31	60_37	60_44	60_52
Output in kW	14,3 - 22,0	23,8 - 27,5	28,6 - 33,0	35,8 - 41,3	40,5 - 46,8	47,7 - 55,1
oil A	1004003	1004004	1004005	1004006	1004007	1004008
gas B	1004009	10040010	1004011	1004012	1004013	1004014
Price/€	5,010.00	5,160.00	5,330.00	5,560.00	5,880.00	6,380.00

All order numbers correspond to the equipment with Siemens control. For the variant with EBV, please contact us.

Accessories / Option	Order no.	36_19	36_25	36_31	60_37	60_44	60_52
extra charge for connection pipes, balanced operation DN80/125	1002584	315.00	315.00	315.00	315.00	-	-
150 l horizontal tank [1]	1003938	1,465.00	1,465.00	1,465.00	-	-	-
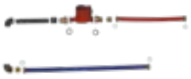 Storage tank pump set with energy efficiency pump	1003929	433.00	433.00	433.00	-	-	-

1) technical datas see page 29
optional tanks: see chapter 7, page 66-67

Package Integra 36/60 oil and gas condensing boilers with flue gas systems

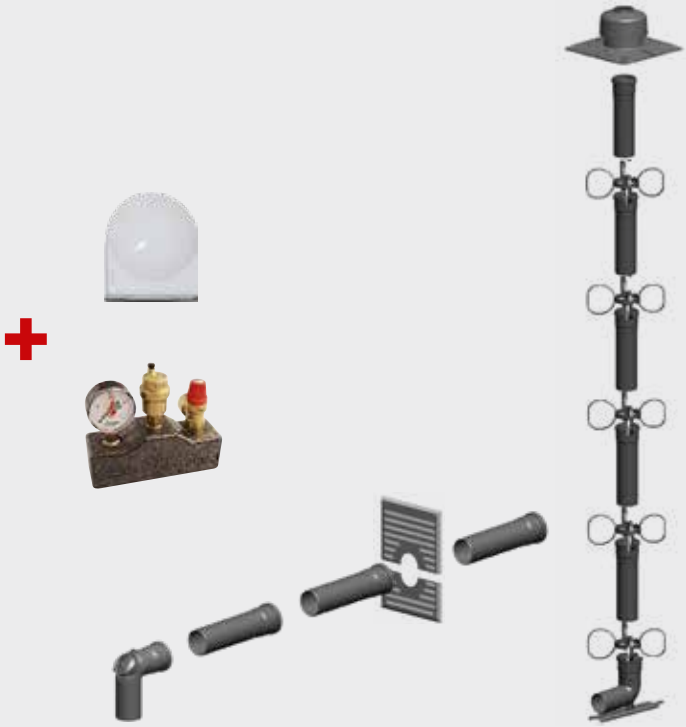

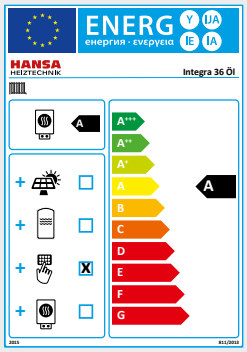

Package content

- Oil and gas condensing boilers
- Base and unit hood
- Oil burner or gas burner
- Outdoor sensor
- Safety group
- Boiler fitting
- Flue gas kit DN80 or DN100 rigid in the duct (12 m)
- Flue gas kits connecting pipe DN80 or DN100

Package	36_19	36_25	36_31	60_37	60_44	60/52
Output in kW	14,3 - 22,0	23,8 - 27,5	28,6 - 33,0	35,8 - 41,3	40,5 - 46,8	47,7 - 55,1
oil A	1004015	1004016	1004017	1004018	1004019	1004020
gas B	1004021	1004022	1004023	1004024	1004025	1004026
Price/€	5,150.00	5,250.00	5,450.00	5,680.00	5,980.00	6,450.00

All order numbers correspond to the equipment with Siemens control. For the variant with EBV, please contact us.

Package Integra 36/60 oil and gas condensing boilers with flue gas systems and storage tank

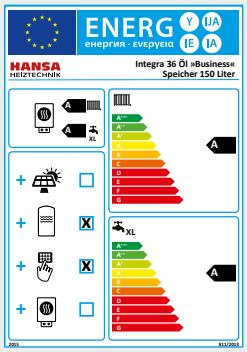

Package content

- Oil and gas condensing boilers
- Oil burner or gas burner
- Outdoor sensor
- Safety group
- 150 l horizontal tank
- Boiler senor
- Speicherladepumpenset
- Storage tank pump set
- Flue gas kit DN80 or DN100 rigid in the duct (12 m)
- Flue gas kits connecting pipe DN80 or DN100

Package	36_19	36_25	36_31
Output in kW	14,3 - 22,0	23,8 - 27,5	28,6 - 33,0
Storage tank	150 litre	150 litre	150 litre
oil SYSTEM A / XL A	1004027	1004028	1004029
gas SYSTEM B / XL A	1004030	1004031	1004032
Price/€	5,800.00	5,950.00	6,150.00

All order numbers correspond to the equipment with Siemens control. For the variant with EBV, please contact us.

Accessories exhaust and air supply line

	Model	Integra 36	Integra 60	Order no.	Price/€
	Extra charge for connection pipes, balanced operation DN80/125	X	X[1]	1002584	315.00
	Flue gas connection, balanced operation. Boiler fitting DN 80/125, straight with air supply air spigot and STL connection.	X	X[1]	1002075	177.35
	Inspection bend, concentric 87° with measurement opening	X	X[1]	1002016	120.10
	Flue gas connection, open operation. Boiler fitting DN 80 straight with measuring opening and STL connection.	X	—	1002074	64.70
	Flue gas connection, open operation. Boiler fitting DN 100 straight with measuring opening. STL connection (extension art.no. 1002018 required).	X	X	1002073	67.75
	Neutralisation box, incl. 1 bag of granules	X	X	1002100	85.60

1) only Integra 60_37

Accessories Siemens RVS control

Model	Integra 36	Integra 60	Order no.	Price/€
Albatros control, set 1 basic control, weather-compensated 2-point-controller incl. outdoor and boiler sensor	X	X	1001520	674.00
Albatros control, set 2 basic control for 2-stage burner, cascading, solar controller (1 or 2 collector panel) incl. outdoor and boiler sensor	X	X	1001518	890.00
Extension module. For an additional mixer circiut as addition to Albatros control (art.no. 1001520).	X[2)]	X[2)]	1001534	285.00
Room unit QAA75.610 wired. The room unit features plain text operation and room temperature logging in one. It can be installed in the room or at the boiler and shows the functions and settings of the base unit.	X	X	1001522	327.00
Flow sensor QAD 36/201	X	X	1001533	46.80
Radio Module AVS 71.390/109. The radio module with transmitter, receiver and antenna permits the wireless connection of base unit to room unit (art.no. 1001523) and outdoor temperature sensor (art.no. 1001525). It is connected via flat ribbon cable to the base unit.	X[3)]	X[3)]	1001524	204.00
Room unit QAA78.610 wireless (description see above, the required wireless module (art.no. 1001524) is not part of the delivery scope)	X	X	1001523	354.50
Wireless transmitter for outdoor sensor AVS 13.399/201. The wireless outdoor temperature sensor can be combined to a set with sensor and corresponding radio module (art.no. 1001524). It is used as extension to the remote control module and permits a wireless measurement of the outdoor temperature.	X	X	1001525	172.00

Accessories EBV control

Model	Integra 36	Integra 60	Order no.	Price/€
Theta 23B weather-compensated cntrol woth outdoor sensor, tank sensor, boiler sensor and cable harness (expect for flow sensor).	X	X	1001774	674.00
Flow sensor VF 202. For Theta controls. One flow sensor required per mixer circuit.	X	X	1001767	31.50
Room unit Thea RS-L	X	X	1001752	270.98

2) feature extension for set 1 rvs 13
3) control feature extention radio (needed for radio)

Accessories hydraulics

	Model	Integra 36	Integra 60	Order no.	Price/€
	Safety group with pressure gauge (2.5 bar), pressure relief valve, quick exhaust valve and an elbow fitting. Incl. all gaskets.	X	X	1001898	76.00
	Mixer circuit set DN25 Integra/SND consisting of a Hansa high-output pump HE55-25, a mixer motor, two shut-off valves, one return connection and two thermometers. Delivery including all gaskets and rigid foam insulation.	X	X	1004039	650.00
	Heating circuit set DN25 Integra/SND consisting of a Hansa high-output pump HE55-25, two shut-off valves, one return connection and two thermometers. Delivery including all gaskets and rigid foam insulation.	X	X	1004041	450.00
	Mixer circuit set DN32 Integra/SND consisting of a Hansa high-output pump HE55-25, a mixer motor, two shut-off valves, one return connection and two thermometers. Delivery including all gaskets and rigid foam insulation.	X	X	1004040	690.00
	Heating circuit set DN32 Integra/SND consisting of a Hansa high-output pump HE55-25, two shut-off valves, one return connection and two thermometers. Delivery including all gaskets and rigid foam insulation.	X	X	1004042	480.00
	Mixer motor 230 V/50 Hz.	X	X	1001907	233.00

Accessories various

	Model	Integra 36	Integra 60	Order no.	Price/€
	AVS mains module 16.290/183. The power supply feeds the components used in the boiler. It features a mechnical STL (safety temperature limiter), is electrically fused and offers 4 switches or control lamps.	X	X	1001560	142.00
	Boiler control unit AVS 37.294/183. The control device is integrated into the boiler and wired to the base unit. It shows the functions and settings of the base unit, permitting an ergonomic and easy operation.	X	X	1001528	206.00
	Controller Basic module RVS 13.143/183. The basic unit is the actual heating or heat pump controller with the input and output terminals with non-salient poles. It has no controls. It is operated via remote accessories that communicate wired or wirelessly.	X	X	1001527	366.50

SND series – low-temperature boiler unit

Affordable heat generator with low-temperature technology (will continue to be approved according to EnEV 2014 and EU Energy Efficiency Directive in the future) primarily for existing buildings with heat distrubition systems that make the use of condensing technology technically impractical and/or economically unviable.

The scope of delivery includes the long-lasting high-output cast iron boiler unit, weather-compensated 2-point control, panelling with insulation, STB flue gas, boiler connection piece as well as an outdoor, boiler and drinking water sensor.

Optionally, A.) Siemens or B.) EBV control can be selected for the units.

A.)

B.)

Reliable oil burners (blue burners) complete the package.

The versions with a horizontal tank also include a storage tank charging pump set.

The painstaking workmanship guarantees a long service life. Comfortable warmth – Made in Germany!

The boilers are available with the following output ranges:

- 18,3 – 22,0 kW – SND 30_19
- 22,8 – 27,5 kW – SND 30_24

Advantages at a glance

- Long-lasting high-output cast iron boiler units
- Reliable oil burners (blue burners)
- Optionally equipped with a weather-compensated control (Siemens or EBV)
- User-friendly mounting and service
- Compact dimensions

Technical data

Model	SND 30_19	SND 30_24
Output in kW	19	24
Product ID number	-	
Oil burner	HBU 21_20	HBU 21_26
Steinen oil nozzle	ST 80° 0,40gph	ST 80° 0,50gph
Boiler heat output range in kW, 50/30° C	-	
Boiler heat output range in kW, 80/60° C	17 - 20,5	21 - 25
Boiler heat output range in kW	18,3 - 22	22,8 - 27,5
Efficiency rated output 80/60°C in %	92,3	
Efficiency rated output 50/30°C in %	-	
Efficiency 0.3 x rated output, 40°C in %	-	
NOx - Klasse	5	
Room heating energy efficiency class	B	
Abgasanschluss	130	
Connection height flue gas nozzle with horizontal storage / base / feet in mm"	1090[2] / 84[2] / 540[2]	
Boiler height with horizontal storage/base/feet in mm "	1435[2] / 1185[2] / 885[2]	
Boiler depth in mm with/without unit hood	770 / 455	
Boiler width in mm	600	
Boiler weight in kg	105	
Boiler water content in ltr.	12,8	
Water content of flue gas heat exchanger in ltr.	-	
Resistance on heating-gas end in mbar	0,05	0,11
Front-return connection (internal thread)	5/4"	
max. operating pressure in bar	3	
Flue gas mass flow rate (max.) in g/s	9,84	11,55
Pressure flue gas side in Pa	7[4]	13[4]
Nominal flue gas temperature in °C	158	176
Electrical connection (VAC / Hz)	1, N, PE / 230V, 50Hz	
Fuse	F6A	

Horizontal tank	TS 150
Horizontal tank capacity in ltr.	150
Front-return boiler connection (internal thread)	1"
Hot-cold water (outer thread)	3/4"
Tank weight in kg	95
Tank height including feet in mm	575
Tank width in mm	600
Tank length in mm	1030
max. operating pressure in bar	10

2) Flue pipe middle
4) recommended chimney draft in Pa

HANSA SND low-temperature oil boiler with accessories

HANSA SND low-temperature oil boiler with accessories
+ ingot + pannelling + weather-compensated control (incl. sensor) except flow sensor (extra large)
+ 1-stage burner oil burner

HANSA SND low-temperature oil boiler with accessories	30_19	30_24
Output in kW	18,3 - 22,0	22,8 - 27,5
Order no. B	1004033	1004034
Price	3,350.00	3,450.00

Accessories	Order no.	30_19	30_24
150 l horizontal tank[1]	1003938	1,465.00	1,465.00
Storage tank pump set with energy efficiency pump	1003929	433.00	433.00

1) technical datas see page 29
optional tanks: see chapter 7, page 66-67

Package SND low-temperature oil boiler with storage tank

+ SND low-temperature oil boiler
+ Oil burner
+ Safety Group
+ Outdoor sensor
+ 150 l horizontal tank
+ Storage tank pump

Package	Storage tank	Energy efficiency class	Order no.	Price/€
SND 30_19 (18,3 - 22,0 kW)	150 litre	SYSTEM B / XL A	1004035	4,850.00

+ SND low-temperature oil boiler
+ Oil burner
+ Safety Group
+ Outdoor sensor
+ 150 l horizontal tank
+ Storage tank pump

Package	Storage tank	Energy efficiency class	Order no.	Price/€
SND 30_24 (22,8 - 27,5 kW)	150 litre	SYSTEM B / XL A	1004036	4,950.00

All order numbers correspond to the equipment with Siemens control. For the variant with EBV, please contact us.

Accessories Siemens RVS control

	Model	Order no.	Price/€
	Albatros control, set 1 basic control, weather-compensated 2-point-controller incl. outdoor and boiler sensor	1001520	674.00
	Albatros control, set 2 basic control for 2-stage burner, cascading, solar controller (1 or 2 collector panel) incl. outdoor and boiler sensor	1001518	890.00
	Extension module. For an additional mixer circiut as addition to Albatros control (art.no. 1001520).	1001534	285.50
	Room unit QAA75.610 wired. The room unit features plain text operation and room temperature logging in one. It can be installed in the room or at the boiler and shows the functions and settings of the base unit	1001522	327.00
	Flow sensor QAD 36/201	1001533	46.80
	Radio Module AVS 71.390/109. The radio module with transmitter, receiver and antenna permits the wireless connection of base unit to room unit (art.no. 1001523) and outdoor temperature sensor (art.no. 1001525). It is connected via flat ribbon cable to the base unit.	1001524	204.00
	Room unit QAA78.610 wireless (description see above, the required wireless module (art.no. 1001524) is not part of the delivery scope)	1001523	354.50
	Wireless transmitter for outdoor sensor AVS 13.399/201. The wireless outdoor temperature sensor can be combined to a set with sensor and corresponding radio module (art.no. 1001524). It is used as extension to the remote control module and permits a wireless measurement of the outdoor temperature.	1001525	172.00

1) feature extension for set 1 rvs 13
2) control feature extention radio (needed for radio)

Accessories EBV control

	Model	Order no.	Price/€
	Theta 23B weather-compensated cntrol woth outdoor sensor, tank sensor, boiler sensor and cable harness (expect for flow sensor).	1001774	674.00
	Flow sensor VF 202. For Theta controls. One flow sensor required per mixer circuit.	1001767	31.50
	Room unit Thea RS-L	1001752	270.98

Accessories hydraulics

	Model	Order no.	Price/€
	Safety group with pressure gauge (2.5 bar), pressure relief valve, quick exhaust valve and an elbow fitting. Incl. all gaskets.	1001898	76.00
	Mixer circuit set DN25 Integra/SND consisting of a Hansa high-output pump HE55-25, a mixer motor, two shut-off valves, one return connection and two thermometers. Delivery including all gaskets and rigid foam insulation.	1004039	650.00
	Heating circuit set DN25 Integra/SND consisting of a Hansa high-output pump HE55-25, two shut-off valves, one return connection and two thermometers. Delivery including all gaskets and rigid foam insulation.	1004041	450.00
	Mixer motor 230 V/50 Hz.	1001907	233.00

Accessories various

	Model	Order no.	Price/€
	AVS mains module 16.290/183. The power supply feeds the components used in the boiler. It features a mechnical STL (safety temperature limiter), is electrically fused and offers 4 switches or control lamps.	1001560	142.00
	Boiler control unit AVS 37.294/183. The control device is integrated into the boiler and wired to the base unit. It shows the functions and settings of the base unit, permitting an ergonomic and easy operation.	1001528	206.00
	Controller Basic module RVS 13.143/183. The basic unit is the actual heating or heat pump controller with the input and output terminals with non-salient poles. It has no controls. It is operated via remote accessories that communicate wired or wirelessly.	1001527	366.50

Flue gas systems – designs

On the following pages will find the various flue gas systems for our devices. Depending on your requirements you will need a different system.

We have listed the most common variants for your comfort.

B23

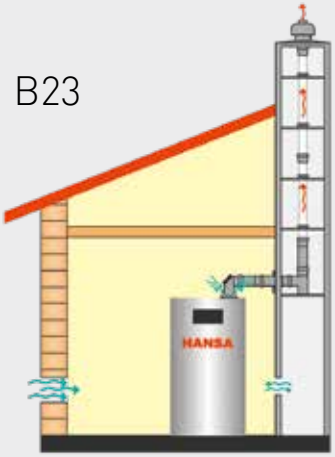

Flue gas pipe rigid in the duct, open

B23

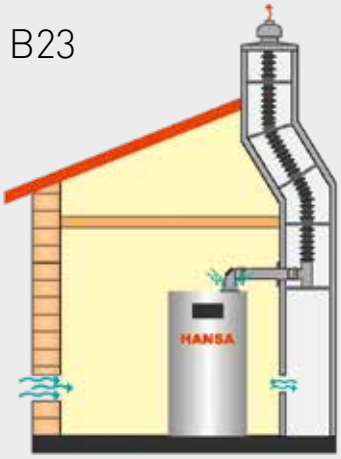

Flue gas pipe flexible in the duct, open

C33

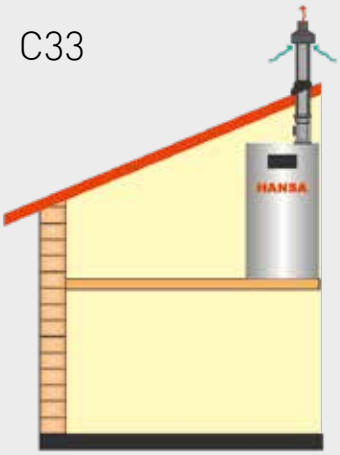

Concentric roof duct (also for duct), balanced

C43

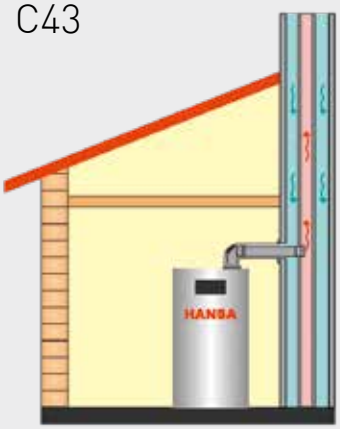

Air/flue gas chimney, balanced, e.g. multiple use

C53

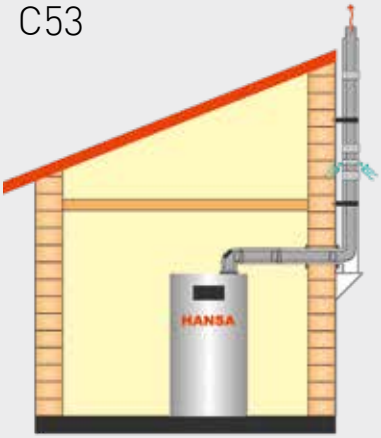

Flue gas pipe on the façade (external wall), balanced

C93

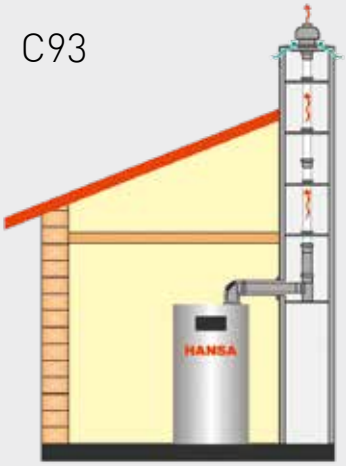

Flue gas pipe rigid in the duct with concentric connection pipe, balanced

C93

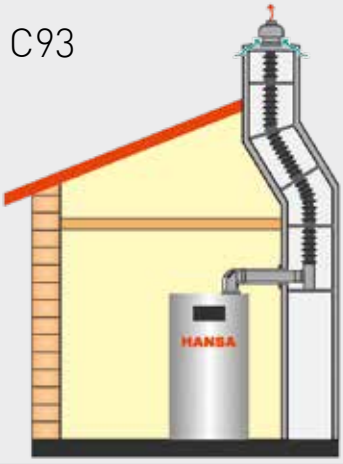

Flue gas pipe flexible in the duct with concentric connection pipe, balanced

Flue gas kit DN60 rigid in the duct

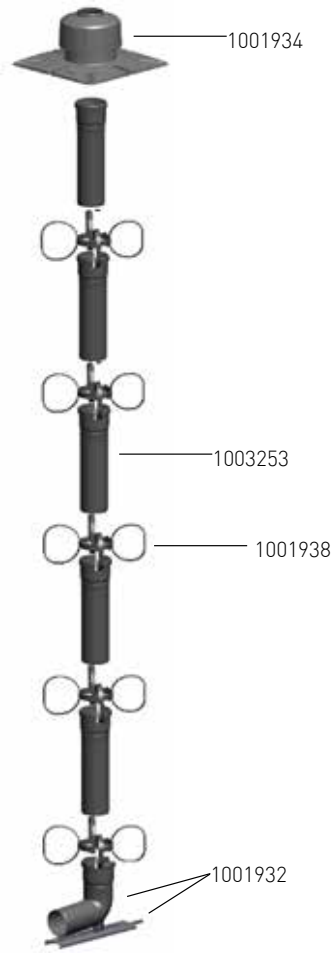

(Quantities in the image differ from the set)

Flue gas kit consists of:	No in kit	Order no.	Price/€
Outlet set plastic	1 x Set	1001934	39.10
Spacer set * (4 pieces)	1 x set	1001938	25.20
Duct inlet with with support	1 x piece	1001932	26.95
Kit price without pipe elements		1001939	**83.50**
Pipe element 1955 mm	6 x pieces	1001929	18.30
Kit price with pipe elements		1002086	**196.50**

* not available separately

Top inspection opening on request

as per DIN 18160 §6.5.3 not required if:
- gaseous fuel
- maximum offset 1 x 30°
- diameter smaller DN150 mm
- maximum vertical height 15 m (support bend - outlet)
- Lower inspection as per DIN 18160 §6.5.2

Item	Order no.	Price/€
Inspection tube, straight	1001921	17.40

Accessories DN60

(additionally available to gas flue kit)

Item	Order no.	Price/€
Bend 30°	1001923	9.55
Bend 45°	1001924	9.55
Bend 87°	1001925	10.45

Item	Order no.	Price€
Pipe element, can be shortened, 500 mm	1001927	9.55
Pipe element, can be shortened, 955 mm	1001928	11.80
Inspection bend 87°	1001920	17.40
Ventilation aperture 280 x 350 mm	1001931	30.40

Flue gas kit DN80 rigid in the duct

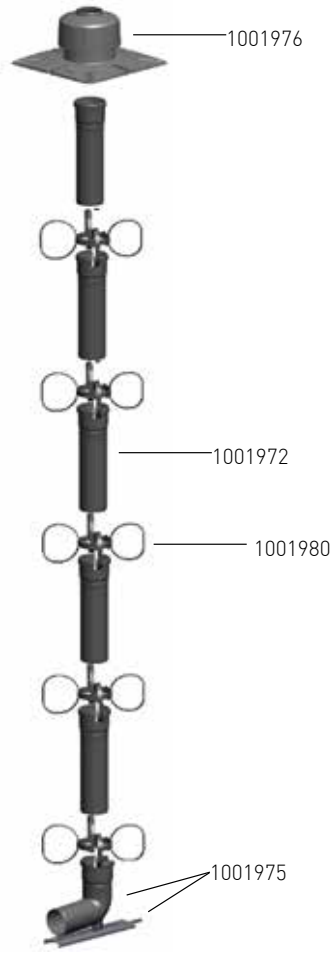

(Quantities in the image differ from the set)

Flue gas kit consists of:	Number in kit	Order no.	Price/€
Outlet set plastic	1 x set	1001976	59.89
Spacer set * (4 pieces)	1 x set	1001980	32.15
Duct inlet with with support	1 x piece	1001975	42.55
Kit price without pipe elements		1001981	**126.30**
Pipe element 1955 mm	6 x pieces	1001972	21.70
Kit price with pipe elements		1002067	**239.50**

* not available separately

Top inspection opening on request

as per DIN 18160 §6.5.3 not required if:
- gaseous fuel
- maximum offset 1 x 30°
- diameter smaller DN150 mm
- maximum vertical height 15 m (support bend - outlet)
- Lower inspection as per DIN 18160 §6.5.2

Item	Order no.	Price/€
Inspection tube, straight	1001964	21.70

Accessories DN80

(additionally available to gas flue kit)

Item	Order no.	Price/€
Bend 30°	1001966	11.30
Bend 45°	1001967	9.60
Bend 87°	1001968	10.50

Item	Order no.	Price/€
Pipe element, can be shortened, 500 mm	1001970	9.45
Rohrelement kürzbar, 955 mm	1001971	12.30
Inspection bend 87°	1001963	23.45
Ventilation aperture 280 x 350 mm	1001974	39.10

Flue gas kit DN100 rigid in the duct

(Quantities in the image differ from the set)

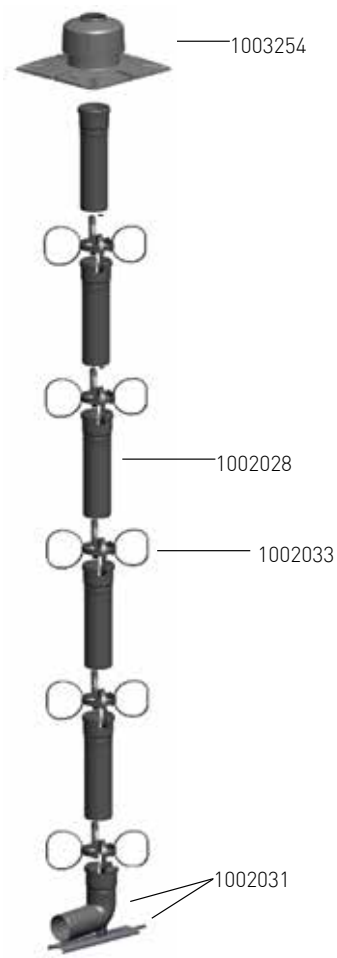

Flue gas kit consists of:	Anzahl im Bausatz	Order no.	Price/€
Outlet set plastic	1 x set	1003254	70.35
Spacer set * (4 pieces)	1 x set	1002033	33.85
Duct inlet with with support	1 x piece	1002031	57.30
Kit price without pipe elements		1002034	**93.65**
Pipe element 1955 mm	6 x pieces	1002028	29.85
Kit price with pipe elements		1002072	**275.00**

Top inspection opening on request

as per DIN 18160 §6.5.3 not required if:
- gaseous fuel
- maximum offset 1 x 30°
- diameter smaller DN150 mm
- maximum vertical height 15 m (support bend - outlet)
- Lower inspection as per DIN 18160 §6.5.2

Item	Order no.	Price/€
Inspection tube, straight	1002020	29.55

Accessories DN100

(additionally available to gas flue kit)

Item	Order no.	Price/€
Bend 30°	1002022	15.65
Bend 45°	1002023	15.65
Bend 87°	1002024	19.10

Item	Order no.	Price/€
Pipe element, can be shortened, 500 mm	1002026	17.40
Pipe element, can be shortened, 955 mm	1002027	22.60
Inspection bend 87°	1002019	32.15
Ventilation aperture 280 x 350 mm	1002030	63.95

* flexible pipe set also available – price on request ** not available separately

Flue gas kit DN60 flexible in the duct

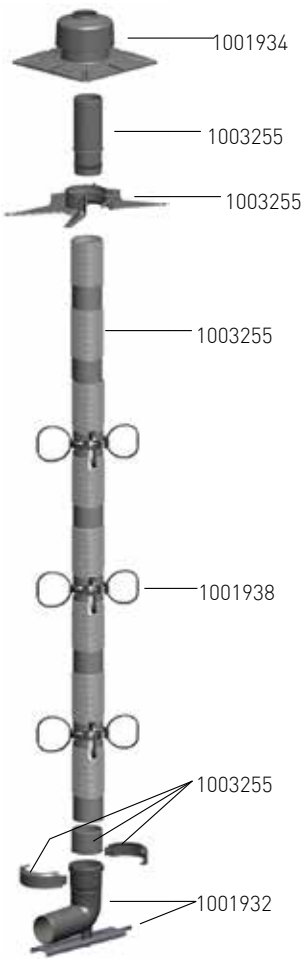

Flue gas kit consists of:	No in kit	Order no.	Price/€
Outlet set plastic	1 x set	1001934	39.10
Spacer set * (4 pieces)	1 x set	1001938	25.20
Duct inlet with with support	1 x piece	1001932	26.95
Kit price without flexible pipe elements		1001939	**83.50**
Flexible pipe element 12.5 m (incl. installation kit)	1 x set	1003255	231.90
Kit price including flexible pipe elements		1002087	**316.50**

Top inspection opening on request

as per DIN 18160 §6.5.3 not required if:
- gaseous fuel
- maximum offset 1 x 30°
- diameter smaller DN150 mm
- maximum vertical height 15 m (support bend - outlet)
- Lower inspection as per DIN 18160 §6.5.2

Item	Order no.	Price/€
Inspection tube, straight	1001922	58.25

Accessories DN60 flexible

(additionally available to gas flue kit)

Item	Order no.	Price/€
Flexible pipe set 10 m (incl. mounting kit)	1003256	182.50
Flexible pipe set 15 m (incl. mounting kit)	1003257	275.50
Coupling for flexible pipe	1001979	54.70

Item	Order no.	Price/€
Mounting kit * for flexible pipe	1001930	32.98
Outlet set** 330 x 330 mm, stainless steel	1001935	126.75
Lubricant 150 g	1002012	6.95

* not available separately ** also suitable for rigid construction, in exchange for 1001934

Flue gas kit DN80 flexible in the duct

Available also in DN100 on request.

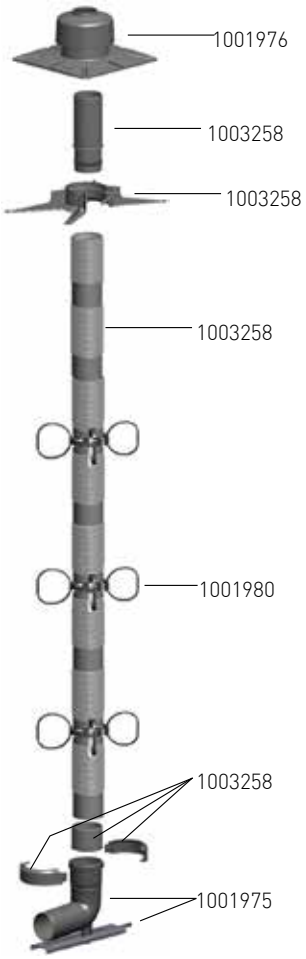

Flue gas kit consists of:	No in kit	Order no.	Price/€
Outlet set plastic	1 x set	1001976	59.89
Spacer set * (4 pieces)	1 x set	1001980	32.15
Duct inlet with with support	1 x piece	1001975	42.55
Kit price without flex pipe set		1001981	**126.30**
Flexible pipe set 12.5 m (incl. mounting kit)	1 x set	1003258	335.00
Kit price incl. flex tube set		1002076	**336.50**

Top inspection opening on request

as per DIN 18160 §6.5.3 not required if:
- gaseous fuel
- maximum offset 1 x 30°
- diameter smaller DN150 mm
- maximum vertical height 15 m (support bend - outlet)
- Lower inspection as per DIN 18160 §6.5.2

Item	Order no.	Price/€
Inspection tube, straight	1001965	85.95

Accessories DN80 flexible

(additionally available to gas flue kit)

Item	Order no.	Price/€
Flexible pipe set 10 m (incl. mounting kit)	1001959	261.50
Flexible pipe set 15 m (incl. mounting kit)	1003006	401.00
Coupling for flexible pipe	1001979	54.70

Item	Order no.	Price/€
Mounting kit * for flexible pipe	1001973	32.98
Outlet set** 330 x 330 mm, stainless steel	1001977	148.45
Lubricant 150 g	1002012	6.95

* not available separately ** also suitable for rigid construction, in exchange for 1001934

Flue gas kit DN60/100 central roof unit

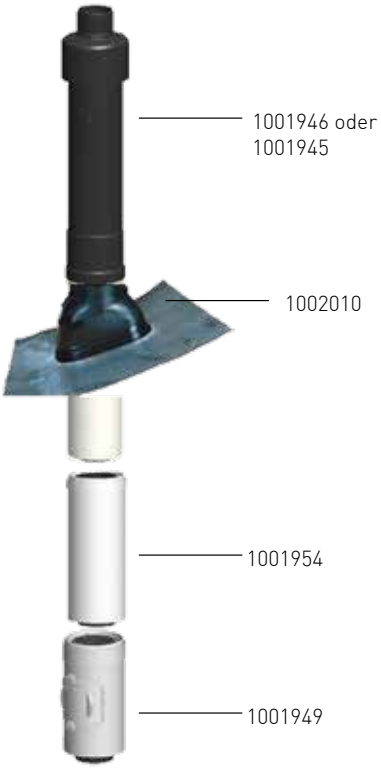

Kit "black" consists of:	Number in kit	Order no.	Price/€
Flue terminal, concentric	1 x piece	1001946	112.85
Pitched roof tile 20 - 45°	1 x piece	1002010	54.70
Pipe element, concentric, 500 mm	1 x piece	1001954	33.75
Control pipe, concentric	1 x piece	1001949	59.55
Lubricant 150 g	1 x piece	1002012	6.95
Kit price		1002088	**239.00**

Kit "red" consist of:	Number in kit	Order no.	Price/€
Flue terminal, concentric	1 x piece	1001945	112.85
Pitched roof tile 20 - 45°	1 x piece	1002010	54.70
Pipe element, concentric, 500 mm	1 x piece	1001954	33.75
Control pipe, concentric	1 x piece	1001949	59.55
Lubricant 150 g	1 x piece	1002012	6.95
Kit price		1002089	**239.00**

Accessories

(additionally available to gas flue kit)

Item	Order no.	Price/€
Bend 30° concentric	1001950	34.75
Bend 45° concentric	1001951	34.75
Bend 87° concentric	1001952	45.65

Item	Order no.	Price/€
Pipe element, concentric, 255 mm	1001953	24.80
Pipe element, concentric, 955 mm	1001955	43.65
Inspection bend 87° concentric	1001948	70.45

Item	Order no.	Price/€
Wall terminal DN 60/100	1001947	84.29

Flue gas kit DN80/125 central roof unit

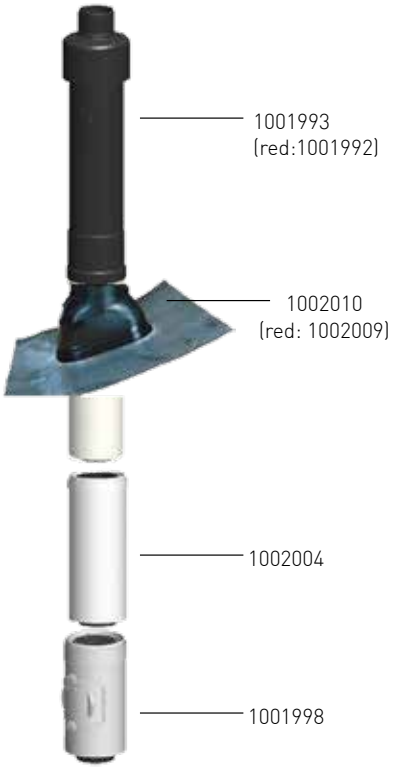

Kit "black" consists of:	Number in kit	Order no.	Price/€
Flue terminal, concentric	1 x piece	1001993	128.50
Pitched roof tile 20 - 45°	1 x piece	1002010	54.70
Pipe element, concentric, 500 mm	1 x piece	1002004	44.65
Control pipe, concentric	1 x piece	1001998	84.35
Lubricant 150 g	1 x piece	1002012	6.95
Kit price		1002069	**274.85**

Kit "red" consists of:	Number in kit	Order no.	Price/€
Flue terminal, concentric	1 x piece	1001992	128.50
Pitched roof tile 20 - 45°	1 x piece	1002009	54.70
Pipe element, concentric, 500 mm	1 x piece	1002004	44.65
Control pipe, concentric	1 x piece	1001998	84.35
Lubricant 150 g	1 x piece	1002012	6.95
Kit price		1002070	**274.85**

Accessories

(additionally available to gas flue kit)

Item	Order no.	Price/€
Bend 30° concentric	1002000	41.70
Bend 45° concentric	1002001	42.70
Bend 87° concentric	1002002	60.55

Item	Order no.	Price/€
Pipe element, concentric, 255 mm	1002003	36.70
Pipe element, concentric, 955 mm	1002005	65.50
Inspection bend 87° concentric	1001997	95.25

Item	Order no.	Price/€
Wall terminal DN 80/125	1001996	74.65

Flue gas kit DN80/125 external wall

Design: "Stainless steel" or "white"

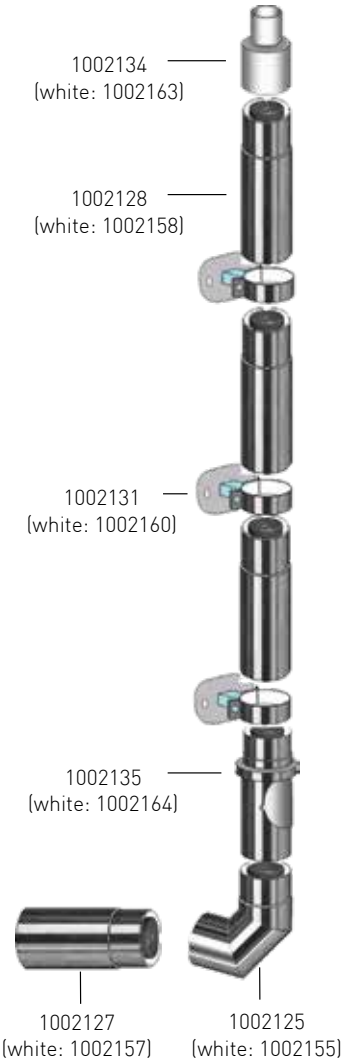

Kindly tick the required design! →				
Components	**Order no. "stainless steel"**	**Order no. "white"**	**Price/**	**Order quantity**
Flue terminal, red	1002136	1003261	214.85	
Flue terminal, black	1002137	1002166	214.85	
Pitched roof tile 20 - 45°, red	1002009	1002009	54.70	
Pitched roof tile 20 - 45°, black	1002010	1002010	54.70	
Aluminium flashing for flat roof	1001994	1001994	33.85	
Top stub 145 mm effective length	1002134	1002163	56.50	
Wall clamp 50 mm	1002131	1002160	71.90	
Wall clamp 50 - 150 mm, can be shortened	1002132	1002161	86.80	
Wall clamp 50 - 360 mm, can be shortened	1002133	1003259	146.50	
Inspection pipe	1003122	1002152	104.50	
Bend 30°	1002123	1002153	74.90	
Bend 45°	1002124	1002154	74.90	
Pipe element 190 mm, can be shortened	1002126	1002156	61.00	
Pipe element 440 mm, can be shortened	1002127	1002157	68.50	
Pipe element 940 mm, can be shortened	1002128	1002158	78.50	
Inspection pipe with air intake	1002135	1002164	155.50	
External wall bend 87°	1002125	1002155	78.50	
Wall rose Ø 265 mm	1002129	1002159	41.25	
Lubricant 150 g	1002012	1002012	6.95	

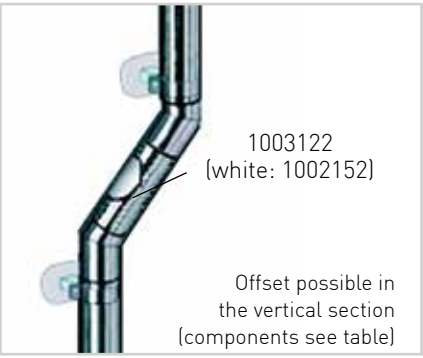

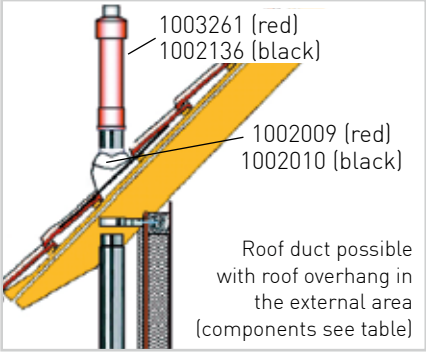

Use this Page as order form.

- Copy
- Complete
- Fax to:
  +49 (0)42 85 93 07 30

Flue gas kits connecting pipes

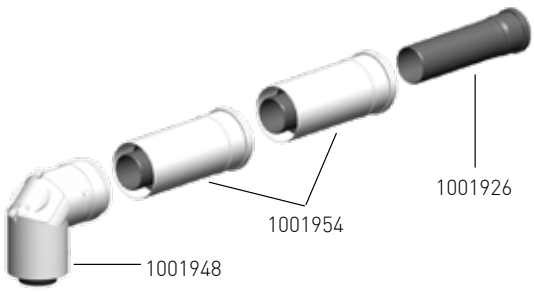

Kit "concentric" DN60/100 consists of:	Number in kit	Order no.	Price/€
Pipe element 255 mm, can be shortened	1 x piece	1001926	8.75
Pipe element concentric, 500 mm, can be shortened	2 x pieces	1001954	33.75
Inspection bend 87°, concentric	1 x piece	1001948	70.45
Lubricant 150 g	1 x piece	1002012	6.95
Kit price		1002090	**124.00**

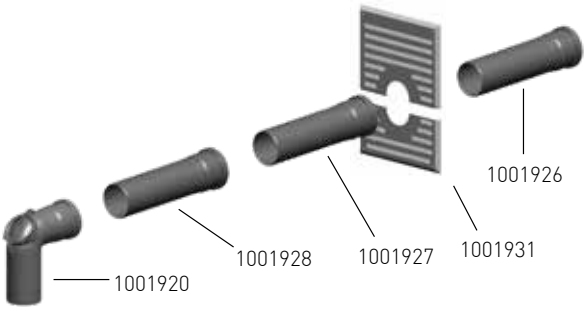

Kit DN 60 consists of:	Number in kit	Order no.	Price/€
Pipe element 255 mm, can be shortened	1 x piece	1001926	8.75
Wall panel 280 x 350 mm	1 x piece	1001931	30.40
Pipe element 500 mm, can be shortened	1 x piece	1001927	9.55
Pipe element 955 mm, can be shortened	1 x piece	1001928	11.80
Inspection bend 87°	1 x piece	1001920	17.40
Lubricant 150 g	1 x piece	1002012	6.95
Kit price		1003260	**74.50**

Flue gas kits connecting pipes

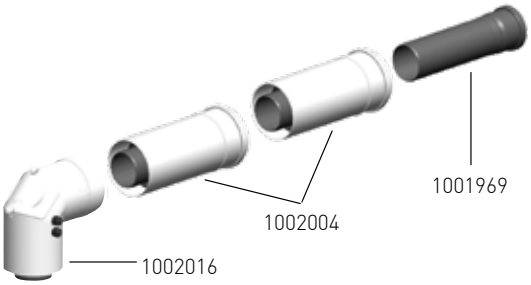

Kit "concentric" DN80/125 consists of:	Number in kit	Order no.	Price/€
Pipe element 255 mm, can be shortened	1 x piece	1001969	8.75
Pipe element concentric, 500 mm, can be shortened	2 x pieces	1002004	44.65
Inspection bend, concentric 87° with measurement opening	1 x piece	1002016	120.10
Lubricant 150 g	1 x piece	1002012	6.95
Kit price		1002068	**173.60**

Flue gas kits connecting pipes

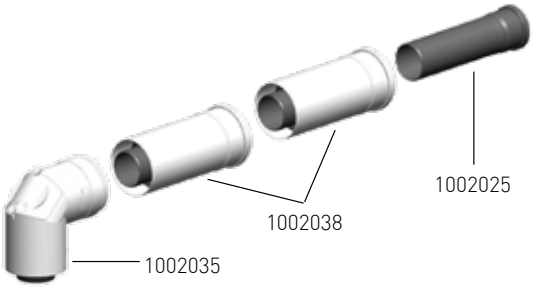

Kit "concentric" DN100/150 consists of:	Number in kit	Order no.	Price/€
Pipe element 255 mm, can be shortened	1 x piece	1002025	13.10
Pipe element concentric, 500 mm, can be shortened	2 x pieces	1002038	91.80
Inspection bend 87°, concentric	1 x piece	1002035	202.15
Lubricant 150 g	1 x piece	1002012	6.95
Kit price		1002077	**329.25**

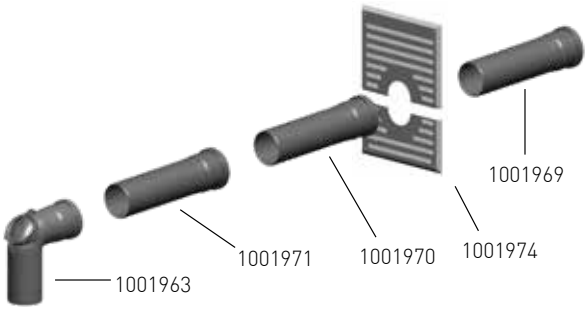

Kit DN 80 consists of:	Number in kit	Order no.	Price/€
Pipe element 255 mm, can be shortened	1 x piece	1001969	8.75
Wall panel 280 x 350 mm	1 x piece	1001974	39.10
Pipe element 500 mm, can be shortened	1 x piece	1001970	9.45
Pipe element 955 mm, can be shortened	1 x piece	1001971	12.30
Inspection bend 87°	1 x piece	1001963	23.45
Lubricant 150 g	1 x piece	1002012	6.95
Kit price		1002066	**87.25**

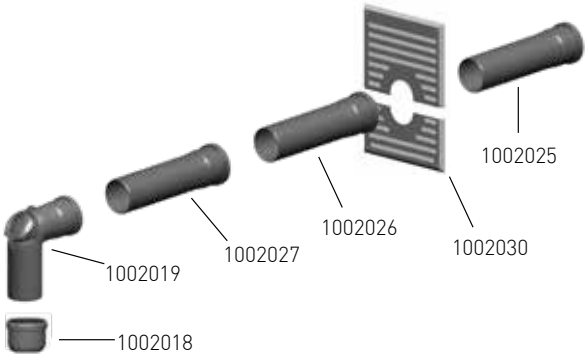

Kit DN 100 consists of:	Number in kit	Order no.	Price/€
Pipe element 255 mm, can be shortened	1 x piece	1002025	13.10
Wall panel 280 x 350 mm	1 x piece	1002030	63.95
Pipe element 500 mm, can be shortened	1 x piece	1002026	17.40
Pipe element 955 mm, can be shortened	1 x piece	1002027	22.60
Inspection bend 87°	1 x piece	1002019	32.15
Reduction, concentric 110/100	1 x piece	1002018	33.00
Lubricant 150 g	1 x piece	1002012	6.95
Kit price		1002071	**115.95**

Terminal lenghts supply air-flue-systems for gas-condensing boilers

Model	Output kW	Boiler fitting, connecting pipe [2] concentric	riser				
			duct [1]				
			DN	walled, flue			
				open flue		balanced balanced	
				rigid	flexible	rigid	flexible
PEGA 25_18/25	1,8 - 24,2	DN80/125	60	20 m	14 m	13 m	11 m
			80	24 m	20 m	20 m	13 m
PEGA 40	1,8 - 37	DN80/125	80	35 m	30 m	19 m	18 m
TANTUM 25	4 - 22,5	DN80/125	60	17 m	14 m	15 m	13 m
			80	30 m	30 m	30 m	27 m

Model	Output kW	Boiler fitting, connecting pipe [2] concentric	riser				
			central roof unit		external roof		
			DN	concentric, supply air/flue	DN	concentric, supply air/flue	
						open flue	balanced
PEGA 25_18/25	1,8 - 24,2	DN80/125	60/100	2 m	80/125	12 m	18 m
			80/125	4 m			
PEGA 40	1,8 - 37	DN80/125	80/125	4 m	80/125	18 m	25 m
TANTUM 25	4 - 22,5	DN80/125	60/100	2 m	80/125	30 m	30 m
			80/125	4 m			

1) shaft size: 120 mm x 120 mm - DN60; 140 mm x 140m m - DN80
2) connecting pipe 1 m, 2 x 87° Bogen
3) connecting pipe 1m, 2x 87° Bogen
Calculation data: technical data PEGA and TANTUM.

Kit cascade and multiple use

Available on request from us! Can be combined individually to meet your requirements!

Limit lengths supply air-flue gas systems for INTEGRA oil and gas condensing boilers

Calculation basis

INTEGRA 36: Mass flow rate: 14.9g/s; residual pressure head: 22Pa; Tflue gas: 60°C
INTEGRA 60: Mass flow rate: 25.7g/s; residual pressure head: 22Pa; Tflue gas: 90°C

Operating as room-air dependent

INTEGRA	Output kW	Connecting line		Climb rate in the shaft		Outer wall DN/DN - height
		RLA (room-air dependent)	RLU (non room-air dependent)	rigid	flexible	
		DN	DN/DN	DN - height	DN - height	
36_19	14,3 - 22	80	80/125	80 - 26m	80 - 21m	80/125 - 24m
36_25	23,8 - 27,5	80	80/125	80 - 24m	80 - 19m	80/125 - 20m
36_33	28,6 - 33	80	80/125	100 - 26m	100 - 15m	100/150 26m
60_37	35,8 - 41,3	80	80/125	100 - 26m	100 - 20m	100/150 24m
60_44	40,5 - 46,8	100		100 - 30m	100 - 25m	100/150 22m
60_52	47,7 - 55,1	100		100 - 30m	100 - 25m	100/150 22m

RLA = room-air dependent
RLU = room-air independent
DN = nominal diameter

General information:
Connecting line consisting of 2 pieces of 87° bends, stretched length of 2m and height difference of 1m calculated for square shafts with a minimum measurement as per DIN18160 of 20mm (specifications do not apply to round shafts and larger ring gaps).
Support bends approved for vertical heights of up to 30m. For greater heights, a mounting clip is required on the support curve fitting.
Air intake no more than 1m above the bottom 87° curve for the outer wall system.

Output overview burner

Oil burners

→ 10 kW

HVS 5.3 K
Yellow-flame burner 12 - 43 kW
(Page 58)

HVS 5.3
Yellow-flame burner13 - 42 kW
(Page 58)

HBG 61
Yellow-flame burner15 - 40 kW
(Page 59)

HVS 5.3 Ö
Yellow-flame burner19 - 40 kW
(Page 58)

Oil burners

→ 50 kW

HVS 5.3 G2
Yellow-flame burner40 - 60 kW
(Page 58)

HBG 62
Yellow-flame burner 40 - 100 kW
(Page 59)

HBG 62 Z
Yellow-flame burner 40 - 100 kW
(Page 59)

HS 18.1 Z
Yellow-flame burner 100 - 168 kW
(Page 60)

HS 18.2 Z
Yellow-flame burner 120 - 240 kW
(Page 60)

HS 20 Z
Yellow-flame burner 137 - 297 kW
(Page 61)

HS 30 Z
Yellow-flame burner 210 - 370 kW
(Page 61)

Oil burners

→ 10 kW

HB 21
Blue-flame burner 10 - 21 kW
(Page 57)

HB 40.1
Blue-flame burner 20 - 27 kW
(Page 57)

HB 40.2
Blue-flame burner 27 - 40 kW
(Page 57)

HB 50
Blue-flame burner 37 - 52 kW
(Page 57)

gas burners

→ 10 kW

HSP 1 E/F
gas burners 20 - 36 kW
(Page 62)

HSP 1 E/F
gas burners 30 - 70 kW
(Page 62)

gas burners

→ 70 kW

HSGi 22 E
gas burners 100 - 200 kW
(Page 63)

HSGi 22 EZ
gas burners 100 - 200 kW
(Page63)

Larger burner output on request.

HB series

Oil burners

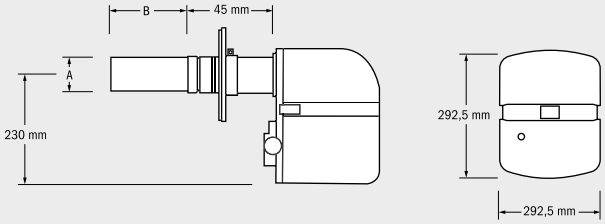

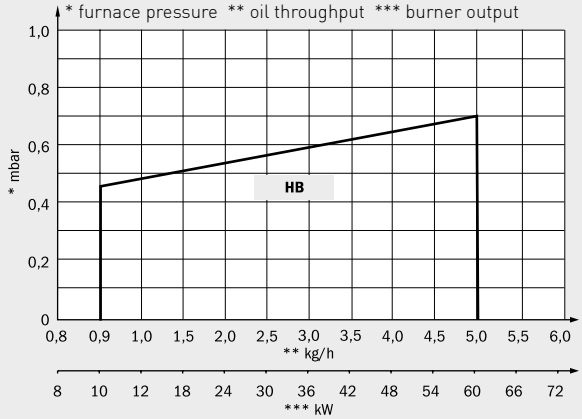

13 - 56 kW

CE Blue-flame burner, 1-stage with oil pre-heater and recirculation mixing facility. Suitable for low-sulphur oil.

HB series fan-assisted oil burners

HB series fan-assisted oil burners are characterised by very smooth running and environmentally-friendly combustion. They are EMPA-tested and approved in accordance with EN 267, suitable for the combustion of heating oil EL according to DIN 51603 with max. 6.0 cSt/293 K (50 °C).
The inbuilt oil pre-heater system (nozzle-independent) ensures a uniform fuel temperature and optimum atomisation of the fuel. A LowNox precision mixing system ensures low-emission combustion with blue flame and ensures simple but precise setting of the oil-air mixing ratio. An optimised high-performance fan guarantees a safe startup and a stable combustion.¬ The air regulation at the suction and discharge side permits precise setting of the air volume even in the lower power range. Furthermore, the practical maintenance positions and the variable installation depth is guarantee easy handling by means of a standard sliding flange.
The specially designed air intake fitting permits even balanced operation if required.

Model	HB 21	HB 40	HB 50
Burner output	13 - 26[1] kW	29 40[2] kW	42 - 56[3] kW
Factory nozzle (Steinen)	ST 80° 0,40gph	ST 80° 0,60gph	ST 80° 1,00gph
Factory burner input	21 kW	30 kW	50 kW
Mains connection	ca. 185 W	ca. 185 W	ca. 360 W
Weight	230 V / 50 Hz	230 V / 50 Hz	230 V / 50 Hz
Heat resistance	90 mm	120 mm	120 mm
(A) Flue diameter	160 mm	199 mm	190 mm
(B) Flue length	13;7 kg	13;7 kg	14,3 kg
Order number	1000040	1000041	1000044
Price/€	1,423.00	1,485.00	1,675.00

1) 13kW - 18kW with nozzle Steinen S 75° 0,30gph / 23kW - 26kW with nozzle Steinen ST 80° 0,50gph
2) 35kW - 40kW with nozzle Steinen S 80° 0,75gph
3) 42kW - 47kW with nozzle Steinen S 80° 0,85gph

Special equipment	Surcharge/€
Hot air relay	139.00
Surcharge for post purge	119.00

5 series

Oil burners

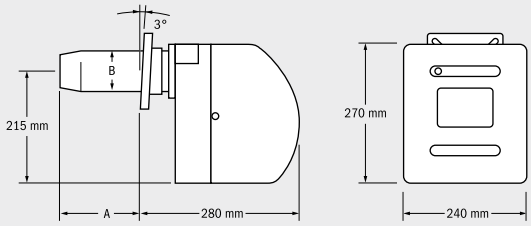

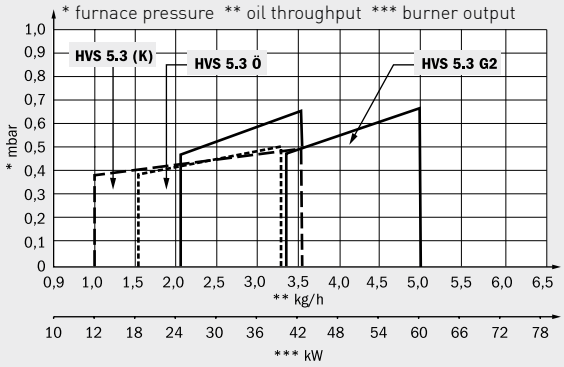

12 - 60 kW

CE Yellow-flame burner, 1-stage with oil pre-heater, solenoid valve, nozzle (HVS 5.3 K without nozzle), integrated function light and sound insulation.

5 series fan-assisted oil burners

5 series fan-assisted oil burners are characterised by very smooth running and environmentally-friendly combustion. They are tested and approved according to EN 267 of the 1. BImSchV, suitable for the combustion of heating oil EL according to DIN 51603 with max. 6.0 cSt/293 K (50 °C).
The inbuilt oil pre-heater system ensures a uniform fuel temperature and optimum atomisation of the fuel. The air choke prevents fast cooling of the combustion chamber in case of standstill of the device.¬ An optimised high-performance fan guarantees a safe startup and a stable combustion. The air regulation at the suction and discharge side permits precise setting of the air volume even in the lower power range and the precision mixing system ensure simple but precise setting of the oil-air mixing ratio. Furthermore, the patented quick closure system, the practical maintenance positions and the variable installation depth is guarantee easy handling by means of a standard sliding flange.

Model	HVS 5.3 K	HVS 5.3	HVS 5.3 G2	HVS 5.3 Ö
Flue	120 mm	172 mm	172 mm	174,5 mm
BimSchV	1. BimSchV	1. BimSchV	1. BimSchV	1. BimSchV
Burner output	12 - 43 kW	13 - 42 kW	40 - 60 kW	19 - 40 kW
Oil throughput	1,3 - 3,5 kg / h	1,3 - 3,5 kg / h	3,3 - 5,0 kg / h	1,5 - 3,3 kg / h
Power input	ca. 160 W	ca. 160 W	ca. 160 W	ca. 160 W
Mains connection	230 V / 50 Hz	230 V / 50 Hz	230 V / 50 Hz	230 V / 50 Hz
Weight	11,9 kg	12,0 kg	12,0 kg	11,9 kg
(A) Insertion depth	60 - 80 mm	60 - 130 mm	60 - 80 mm	60 - 130 mm
(B) Flue diameter	80 mm	80 mm	90 mm	80 mm
Order number	1000005	1000029	1000031	1000030
Price/€	889.00	932.00	993.00	932.00

Special equipment	Surcharge/€
Hot air version	139.00

HBG series

Oil burners

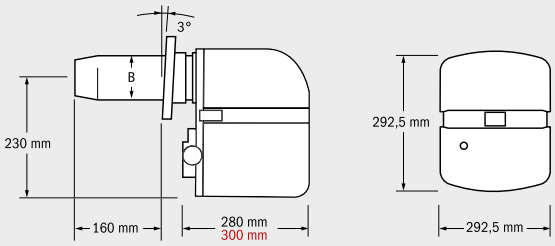

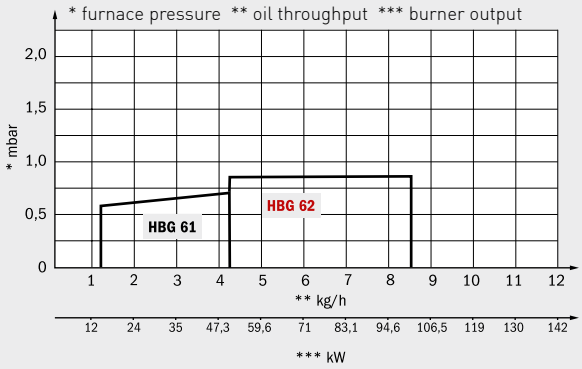

15–100 kW

CE Yellow-flame burner with oil pre-heater, solenoid valve, drop stop, nozzle and soundproofing.

HBG series fan-assisted oil burners

The HBG series fan-assisted oil burners are characterised by very smooth running and environmentally-friendly combustion. They are tested and approved according to EN 267 of the 1. BImSchV, suitable for the combustion of heating oil EL according to DIN 51603 with max. 6.0 cSt/293 K (50 °C).
The inbuilt oil pre-heater system ensures a uniform fuel temperature and optimum atomisation of the fuel. The two-stage technology enables variable operation. The air choke prevents fast cooling of the combustion chamber in case of standstill of the device. An optimised high-performance fan guarantees a safe startup and a stable combustion. The air regulation at the suction and discharge side permits precise setting of the air volume even in the lower power range and the precision mixing system ensure simple but precise setting of the oil-air mixing ratio.

Model	HBG 61	HBG 62	HBG 62 Z
Burner output	15 - 40 kW	40 - 100 kW	40 - 100 kW
Oil throughput	3,5 - 6,0 kg / h	3,5 - 9,2 kg / h	3,5 - 9,2 kg / h
Power input	ca. 240 W	ca. 250 W	ca. 250 W
Mains connection	230 V / 50 Hz	230 V / 50 Hz	230 V / 50 Hz
Weight	13,2 kg	13,7 kg	14,0 kg
(B) Flue diameter	80 mm	90 mm	90 mm
Order number	1000047	1000046	1000061
Price/€	999.00	1,270.00	1,750.00

Special equipment	Surcharge/€
Hot air version	139.00

18 series

Oil burners

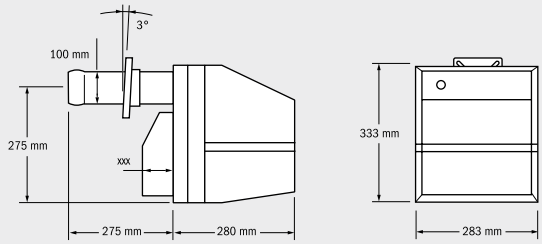

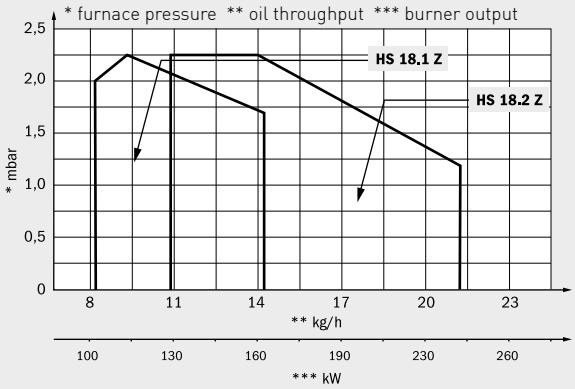

100 - 240 kW

CE Yellow-flame burner, 2-stage

HS 18 series fan-assisted oil burners

HS 18 series fan-assisted oil burners are characterised by very smooth running and environmentally-friendly combustion. They are tested and approved according to EN 267, suitable for the combustion of heating oil EL according to DIN 51603 with max. 6.0 cSt/293 K (20 °C).
The two-stage technology enables variable operation. An optimised high-performance fan guarantees a safe startup and a stable combustion. The air regulation at the suction and discharge side permits precise setting of the air volume even in the lower power range and the precision mixing system ensure simple but precise setting of the oil-air mixing ratio.
Furthermore, the practical maintenance positions and the variable installation depth is guarantee easy handling by means of a standard sliding flange.

Model	HS 18.1 Z	HS 18.2 Z
Conical flue	×	
Cup-shaped head (124 mm)		×
Burner output	100 - 168 kW	120 - 240 kW
Oil throughput	8,4 - 13,5 kg / h	8,4 - 20,1 kg / h
Power input	ca. 180 W	ca. 180 W
Mains connection	230 V / 50 Hz	230 V / 50 Hz
Weight	15,9 kg	15,9 kg
Order number	1000021	1000020
Price/€	1,510.00	1,630.00

Special equipment	Surcharge/€
Hot air version	139.00

20/30 series

Oil burners

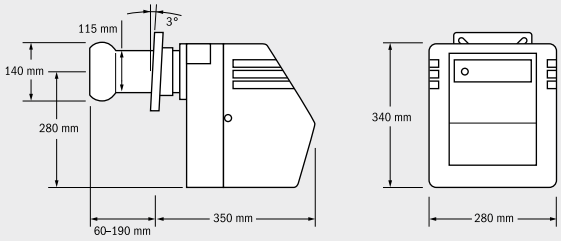

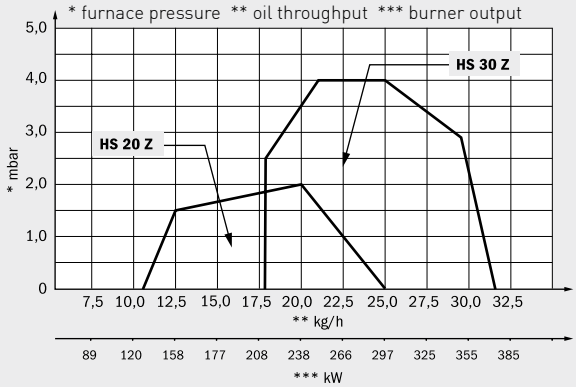

137 - 370 kW

CE Yellow-flame burner, 2-stage

20/30 series fan-assisted oil burners

20/30 series fan-assisted oil burners are characterised by very smooth running and environmentally-friendly combustion. They are tested and approved according to EN 267, suitable for the combustion of heating oil EL according to DIN 51603 with max. 6.0 cSt/293 K (20 °C).
The two-stage technology enables variable operation. The air choke prevents fast cooling of the combustion chamber in case of standstill of the device. An optimised high-performance fan guarantees a safe startup and a stable combustion. The air regulation at the suction and discharge side permits precise setting of the air volume even in the lower power range and the precision mixing system ensure simple but precise setting of the oil-air mixing ratio.
Furthermore, the practical maintenance positions and the variable installation depth is guarantee easy handling by means of a standard sliding flange.

Model	HS 20 Z	HS 30 Z
Burner output	137 - 297 kW	210 - 370 kW
Oil throughput	11,5 - 24,4 kg / h	17,6 - 31,2 kg / h
Power input	ca. 360 W	ca. 360 W
Mains connection	230 V / 50 Hz	230 V / 50 Hz
Weight	20,5 kg	21,0 kg
Order number	1000023	1000024
Price/€	1,750.00	1,985.00

Special equipment	Surcharge/€
Hot air version	139.00

HSP series

gas burners

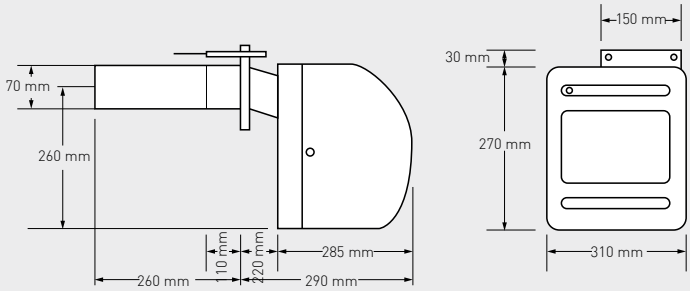

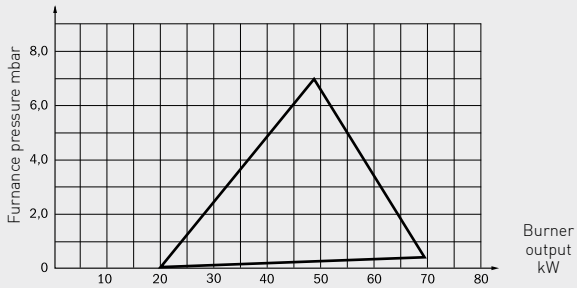

20 - 70 kW

CE Natural gas burner with gas connection ½" – 20 mbar.

HSP fan-assisted gas burner

The HSP series represent an improvement over the HANSA pre-mix gas burners with full gas-air modulation.
They have been tested to DIN EN 676, fall below emissions class 3 and are suitable for the combustion of natural gas (H/L 10/50 mbar) and propane gas.
The pre-mix gas burner features stepless adjustment between 20 kW and 70 kW and is easy to install. Efficient speed control keeps the power consumption of the HSP burner low, making it extremely attractive for end customers.
All HSP gas burners are characterised by low NOx and CO values, high robustness to gas pressure fluctuations and extremely smooth running properties.
They can be operated even at low gas inlet pressures.
Function checks and troubleshooting feature digital readout to simplify handling. Highly stable pressure, good starting characteristics and low-noise operation round out the advantages.

Model	HSP 1 E	HSP 1 E
Natural gas	X	X
LPG	X	X
gas connection	½"	½"
Burner output	20 - 36 kW	30 - 70 kW
Power input	180 W	180 W
Mains connection	230 V / Hz 50	230 V / Hz 50
Weight	7,5 kg	7,5 kg
Order number	1003924	1000089
Price/€	1,830.00	1,830.00

(Burner as LPG model HSP 1 F 20-36 kW – 1004043 | HSP 1 F 30-70 kW – 1003143)

22 series
gas burners

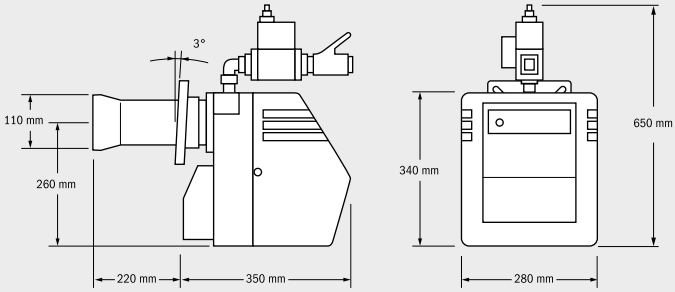

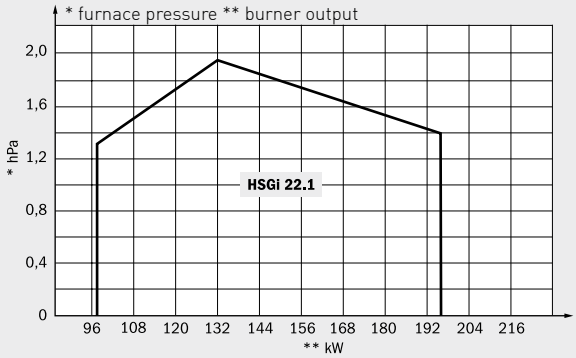

100 - 200 kW

CE Natural gas burner with Multibloc. 20 mbar.

22 series fan-assisted gas burners

22 series fan-assisted gas burners are characterised by very smooth running and environmentally-friendly combustion. They are tested and approved according to EN 676, DIN 4788, CE-0085AS0075 and suitable for the combustion of natural gas H/L 20/25 mbar (E, EZ).
The two-stage technology enables variable operation. The air choke prevents fast cooling of the combustion chamber in case of standstill of the device. An optimised high-performance fan guarantees a safe startup and a stable combustion. The flame monitoring is carried out in accordance with the intrinsically safe ionisation principle. The air regulation at the suction and discharge side permits precise setting of the air volume even in the lower power range.
The precision mixing system ensures simple but precise setting.

Model	HSGi 22 E	HSGi 22 EZ
2-stage	–	X
Natural gas	X	X
Burner output	100 - 200 kW	100 - 200 kW
Power input	ca. 340 W	ca. 340 W
Mains connection	230 V / 50 Hz	230 V / 50 Hz
Weight	25,1 kg	25,4 kg
Order number	1000073	1000072
Price/€	auf Anfrage	auf Anfrage

Solar packages wihtout tank

Solar systems

These solar packages impress with the high-quality flat collectors of Hansa Mäader 2.1.
The offer an increase in efficiency of up to 10 % compared to conventional black chrome absorbers.
The packages are delivered without tank.

Package content

- Flat collectors HANSA Mäander 2.1
- Rooftop installation set
- Dimensions in mm (l: 1,954 / w: 1,054 / d: 80)
- Absorber surface per collector 1.09 m²
- Gross collector surface per collector 2.06 m²
- 2 corrugated pipes, 85 cm each for connection to collector
- Solar liquid
- Digital temperature difference controller incl. 2 sensors PT 1.000
- Solar expansion vessel
- Anti-freeze concentrate

More details on the current subsidy schemes can be found at: www.BAFA.de and www.Kfw.de

Model	2/000	3/000	4/000	5/000	6/000
Number of collectors	2	3	4	5	6
Gross collector surface	4,12 m²	6,18 m²	8,24 m²	10,3 m²	12,36 m²
Absorber surface	3,8 m²	5,7 m²	7,6 m²	9,5m²	11,4 m²
Piping	Mäander 2x connection	Mäander 2x connection	Mäander 2x connection	Mäander 2x connection	Mäander 2x connection
Connections	12 mm	12 mm	12 mm	12 mm	12 mm
Max. Operating pressure	10 bar	10 bar	10 bar	10 bar	10 bar
Solar expansion vessel	25 l	25 l	25 l	25 l	25 l
Anti-freeze concentrate	20 kg	20 kg	30 kg	40 kg	40 kg
Absorber material	Cooper	Cooper	Cooper	Cooper	Cooper
weight per collector	ca. 35 kg	ca. 35 kg	ca. 35 kg	ca. 35 kg	ca. 35 kg
Order number	1003303	1003304	1001000	1000997	1003305
Price/€	3,200.00	3,700.00	4,440.00	5,200.00	5,800.00

Accessories

	Order no.	Price/€
Changeover valve H-UV 3-way changeover valve for switching from 2-cylinder systems or solar layer loading. ¾", 230 V.	1002690	122.00
Thermo box Delta Sol C Plus Two-strand pump unit DN 25 for collector surface from 4 to approx. 40 m². Consisting of flow limiter, safety valve 6 bar, manometer 10 bar, 2 thermometers, 2 shut-off valves, 2 non-return valves, 2 ports for filling and rinsing, block insulation, wall bracket, fastening screws and ferrule fittings. With MAG connection set and deaeration bottle. Incl. sensors for the storage tank and the collector.	1001063	930.00
Solar liquid H-PE 10 For flat collectors. Corrosion and frost protection in the solar circuit with high heat absorption. Non-toxic. Biodegradable according to DIN 4757. Container 10 kg.	1001014	82.95
Solar expansion vessel H-AG Membrane pressure expansion vessel filled with nitrogen. Inlet pressure set to 2.5 bar. Connection G ¾". Operating temperature –10 to +110 °C. With EC DVGW certification cat.		
Expansion vessel H-AG 18 l	1001012	102.00
Expansion vessel H-AG 25 l	1000998	111.00
Expansion vessel H-AG 40 l	1001013	155.50
Solar duo flex pipe, DN 16 Stainless steel corrugated pipes in HT insulation. Flow and return insulated in 2 parallel chambers. Temperature-resistant up to 150 °C. UV-resistant For outdoor installation without additional protective measures. Incl. ¾" union nut Can be shortened on site.		
Solar Duo flex pipe, DN 16, role, 10 m	1001002	419.00
Solar Duo flex pipe, DN 16, role, 15 m	1001003	640.00
Solar Duo flex pipe, DN 16, role, 20 m	1001004	839.00
Solar Duo flex pipe, DN 20 (as above, however DN 20)		
Solar Duo flex pipe, DN 20, role, 10 m	1001005	493.00
Solar Duo flex pipe, DN 20, role, 15 m	1001006	732.00

* Further installation types such as flat roof, facade or in-roof mounting on request. Prices are quoted as extra charge per collector. Customised solar controllers available on request.

Typen

HABS 140-500
Hot water storage tank with enamel coating and 1 heat exchanger, quality insulation 50, 70 or 100 mm, directly foamed, 2 x magnesium anode installed, operating pressure 10 bar (6 bar/HABS 140) WT 16

HABSS 200 – 500
Hot water storage tank with enamel coating and 2 heat exchangers, quality insulation 70 or 100 mm, directly foamed, 2 x magnesium anode installed, operating pressure 10 bar WT 16

HAPS 300 - 1,000
Accumulation tank made from steel S235 without heat exchanger, operating pressure 3 bar, max. operating pressure 95°

Types	Contents	Diameter w/o insulation	Diameter w. insulation	Tilted dimension	Weight	Height
HABS 140	130 litre	-	518 mm	1.390 mm	65 kg	1.290 mm
HABS 200	197 litre	-	700 mm	1.312 mm	84 kg	1.110 mm
HABS 300	265 litre	-	700 mm	1.530 mm	122 kg	1.360 mm
HABS 400	381 litre	-	800 mm	1.889 mm	147 kg	1.710 mm
HABS 500	446 litre	-	800 mm	2.109 mm	195 kg	1.950 mm
HABSS200	197 litre	-	700 mm	1.338 mm	98 kg	1.140 mm
HABSS300	287 litre	-	700 mm	1.637 mm	133 kg	1.480 mm
HABSS400	371 litre	-	800 mm	1.889 mm	162 kg	1.710 mm
HABSS500	437 litre	-	800 mm	2.109 mm	215 kg	1.950 mm
HAPS 300	279 litre	550 mm	750 mm	1.385 mm	55 kg	1.350 mm
HAPS 500	480 litre	650 mm	850 mm	1.665 mm	74 kg	1.630 mm
HAPS 825	718 litre	790 mm	990 mm	1.740 mm	92 kg	1.690 mm
HAPS 1.000	887 litre	790 mm	990 mm	2.085 mm	106 kg	2.040 mm
HAPSR 500	461 litre	650 mm	850 mm	1.665 mm	113 kg	1.630 mm
HAPSR 600	545 litre	700 mm	900 mm	1.690 mm	125 kg	1.650 mm
HAPSR 825	694 litre	790 mm	1.000 mm	1.740 mm	138 kg	1.690 mm
HAPSR 1.000	861 litre	790 mm	1.150 mm	2.085 mm	157 kg	2.040 mm
HAHS 600	517 litre	700 mm	900 mm	1.690 mm	152 kg	1.650 mm
HAHS 825	668 litre	790 mm	990 mm	1.740 mm	190 kg	1.690 mm
HAHS 1.000	832 litre	790 mm	990 mm	2.085 mm	221 kg	2.040 mm
HAHSS 600	496 litre	700 mm	900 mm	1.690 mm	187 kg	1.650 mm
HAHSS 825	635 litre	790 mm	990 mm	1.740 mm	225 kg	1.690 mm
HAHSS 1.000	795 litre	790 mm	990 mm	2.085 mm	261 kg	2.040 mm

HAPSR 500 - 1,000
Accumulation tank made from steel S235 with 1 heat exchanger, operating pressure 3 bar, max. operating pressure 95°

HAHS 600 - 1,000
Stratified storage tank made from steel S235, with 1 smooth tube heat exchanger

HAHSS 600 - 1,000
Stratified storage tank made from steel S235, with 2 smooth tube heat exchangers

Surface WT top / bottom	Surface WT (drinking water)	Performance factor in NL register top/bottom	Energy efficiency class	Order no.	Price/
1,0 m²	–	2,0	B	1001119	750.00
1,4 m²	–	3,0	B	1001120	855.00
1,4 m²	–	4,0	B	1001121	1,017.00
1,8 m²	–	7,0	B	1001122	1,425.00
2,0 m²	–	9,0	B	1003121	1,617.00
0,7 m² / 1,0 m²	–	1,0 / 3,0	B	1003293	1,077.00
1,1 m² / 1,4 m²	–	2,0 / 4,0	B	1001118	1,125.00
1,1 m² / 1,8 m²	–	3,0 / 6,0	B	1003142	1,515.00
1,1 m² / 2,0 m²		3,0 / 9,0	B	1003294	1,725.00
–	–	–	C	1001099	840.00
–	–	–	C	1001101	969.00
–	–	–	C	1001102	1,074.00
–	–	–	C	1003295	1,104.00
2,3 m²	–	–	C	1001105	1,326.00
1,8 m²	–	–	C	1001106	1,389.00
2,8 m²	–	–	C	1003296	1,419.00
3,1 m²	–	–	C	1001104	1,464.00
1,8 m²	6,0 m²	–	C	1003297	3,234.00
2,8 m²	6,0 m²	–	C	1003298	3,369.00
2,8 m²	7,1 m²	–	C	1003299	3,519.00
1,2 m² / 1,8 m²	6,0 m²	1,6	C	1003300	3,504.00
1,8 m² / 2,8 m²	6,0 m²	3,2	C	1003301	3,684.00
2,4 m² / 2,8 m²	7,1 m²	4,0	C	1003302	3,849.00

Spare parts PEGA 18/25/40

	Model	PEGA 25_18 Combi	PEGA 25_18 Heater	PEGA 25 Combi	PEGA 25 Heater	PEGA 40 Combi	PEGA 40 Heater	Order no.	Price/€
	Fan RG 128	X	X	X	X	X	X	1000345	245.70
	Pump head energy efficiency pump	X	X	X	X	X	X	1000456	370.65
	gas valve	X	X	X	X	X	X	1000355	151.20
	Control board BIB 585	X	X	X	X	X	X	1000357	197.93
	Cable set	X	X	X	X	X	X	1000360	205.80
	Iginition lead	X	X	X	X	X	X	1000122	7.60
	Display	X	X	X	X	X	X	1000358	127.30
	Safety valve	X	X	X	X	X	X	1000419	42.50
	Iginition transformer	X	X	X	X	X	X	1000121	22.60
	Sensor draw-off flow rate and Outlet temperature	X	X	X	X	X	X	1000427	115.40
	Pressure sensor return	X	X	X	X	X	X	1000430	104.40
	Ionisation electrode	X	X	X	X	X	X	1000448	34.30
	Ignition electrode	X	X	X	X	X	X	1000342	19.95

Spare parts PEGA 18/25/40

	Model	PEGA 25_18 Combi	PEGA 25_18 Heater	PEGA 25 Combi	PEGA 25 Heater	PEGA 40 Combi	PEGA 40 Heater	Order no.	Price/€
	Outer temperatur sensor	X	X	X	X	X	X	1001802	20.70
	Stepper motor	X	X	X	X	X	X	1000431	58.70
	Flow temperature sensor	X	X	X	X	X	X	1000350	30.35
	Flue gas temperature sensor	X	X	X	X	X	X	1000354	30.50
	Venting valve	X	X	X	X	X	X	1000352	38.85
	Addition cable with relay for external 3-way valve, 24 V connection	X	X	X	X	X	X	1000397	68.80
	Back panel isolation heat exchanger	X	X	X	X	X	X	1002674	68.69
	Plate heat exchanger	X	—	X	—	X	—	1000414	138.00
	Isolation burner plate	X	X	X	X	X	X	1000375	22.50
	Overflow valve 3/4´´	X	X	X	X	X	X	1002681	71.93
	Water quantity limiter 15 litres/min	—	—	—	—	X	—	1000417	6.25
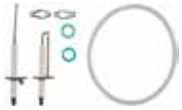	Maintenance set PEGA consisting of rubber loop, iginition electrode, ionisation electrode, gasket for iginition electrode and flat gasket	X	X	X	X	X	X	1000332	54.34
	Temperature sensor	X	X	X	X	X	X	1000387	19.11

Spare parts TANTUM 25

	Model	TANTUM 25 Combi	TANTUM 25 Heater	Order no.	Price/€
	FAN	X	X	1002652	152.25
	Pump head energy efficiency pump	X	X	1000456	370.65
	gas valve	X	X	1003431	131.25
	Control board TANTUM	X	X	1003124	162.75
	Cable set	X	X	1002656	173.25
	Safety valve	X	X	1000419	42.50
	Sensor draw-off flow rate and Outlet temperature	X	X	1000427	115.40
	Pressure sensor return	X	X	1000430	104.40
	Ionisation electrode	X	X	1003265	20.98
	Ignition electrode	X	X	1003264	19.95
	Outdoor sensor	X	X	1003396	17.21
	Stepper motor	X	X	1000431	58.70
	Flow temperature sensor	X	X	1003131	6.80
	Flue gas temperature sensor	X	X	1003078	23.10
	Venting valve	X	X	1000352	38.85

Spare parts TANTUM 25

	Model	TANTUM 25 Combi	TANTUM 25 Heater	Order no.	Price/€
	Plate heat exchanger	X	X	1000414	138.00
	Pressure gauge	X	X	1000353	65.75
	Siphon 230 mm / height 150 mm Seal for Siphon	X X	X X	1003475 1003476	16.59 8.40
	Air intake silencer incl. sound absorption	X X	X X	1003082 1003137	19.85 2.89
	Mini Venturi 25 kW	X	X	1003125	26.15
	gas injector gas H gas injector gas L gas injector gas LPG o-ring for gas injector	X X X	X X X	1003551 1003821 1003553 1003576	19.43 19.43 19.43 1.03
	Condensate corrugated pipe TANTUM	X	X	1003763	8.40
	Maintenance set TANTUM consisting of iginition electrode, ionisation electrode, gasket for iginition electrode and flat gasket	X	X	1003611	52.40
	10 l expansion vessel - 3/8 ´´ connection	X	X	1002657	79.80
	Water quantity limiter 10 litres/min	X	X	1000485	6.25
	Addition cable with relay for external 3-way valve, 24 V connection	X	X	1000397	68.80
	Filling and discharge pipe includong support sleeves no. 22	X	X	1002679	54.80
	Magnetit filter 3/4´´	X	X	1002677	215.00

Spare parts

Model	Integra Mini (condensing)	Integra 36 (condensing)	Integra 60 (condensing)	SND (low-temperature)	SND (condensing)	Order no.	Price/€
Hansa high-output pump Delta HE 35-25 efficiency pump with digital display. ceramic shaft and integrated night setback function. durable and quiet. Filling and discharge pipe	X	X	X	X	X	1002421	257.80
Outdoor sensor QAC 34 / 101	X	X	X	X	X	1001530	27.20
Boiler sensor QAZ 36.522/109	X	X	X	X	X	1001529	24.15
Drinking water sensor QAZ 36.526/109	X	X	X	X	X	1001531	29.30
Flue gas heat exchanger AWT EcoX 4.2 for 5 - 25 kW. DN80 incl. siphon. Stainless steel flue gas heat exchanger. Adapted to all components of the Hansa condensing units.	X	—	—	—	X	1002329	1,127.00
Flue gas heat exchanger AWT EcoX 40 for 10 - 40 kW. DN80 incl. Siphon. (description see above)	X	X	—	—	X	1002326	1,233.00
Flue gas heat exchanger AWT EcoX 4.7 for 40 - 70 kW. DN110 without overflow valve. incl. siphon (description see above)	—	—	X	—	—	1002327	1,545.00
Clip for connectors (spares for all flue gas heat exchanger models)	X	X	X	—	X	1000347	5.57
O-ring 21 x 2 mm (spares for all flue gas heat exchanger models)	X	X	X	—	X	1000348	1.52
Clamp DN 307 with lever (spares for all flue gas heat exchanger models)	X	X	X	—	X	1000378	27.41
Condensation-resistant round cord seal D300	X	X	X	—	X	1002539	54.80
Angle G ¾" GW = angle of T-piece (spares for all flue gas heat exchanger models)	X	X	X	—	X	1002529	16.80
Clamp S139-146 W2 20 (spares for all flue gas heat exchanger models)	X	X	X	—	X	1000394	32.90
Insulation closed (rear) (spares for all flue gas heat exchanger models)	X	X	X	—	X	1000401	76.20
Siphon set with hose 150 mm (spares for all flue gas heat exchanger models)	X	X	X	—	X	1002181	29.40

Spare parts series HB	HB 21	HB 40.1	HB 40.2	HB 50	HB 70	Price/€
Air sleeve	1000916	1000916	1000839	–	–	83.25
Air sleeve	–	–	–	1000906	1000907	162.55
Turbolator centring	1000842	1000842	1000842	–	–	28.50
Flue alloy	1000929	1000929	–	–	–	185.85
Flue alloy	–	–	1000935	–	–	256.70
Flue alloy	–	–	–	1000933	–	298.95
Flue alloy	–	–	–	–	1000910	264.60
Flue collar	1000928	1000928	–	–	–	137.10
Flue collar	–	–	1000920	–	–	139.50
Flue collar	–	–	–	1000904	1000904	261.45
Oil pre-heater	1001247	1001247	1001247	–	–	147.00
Oil pre-heater	–	–	–	1001358	1001358	89.10
Iginition transformer EBI	1001261	1001261	1001261	1001261	1001261	45.70
Iginition cable for EBI	1001259	1001259	1001259	1001259	1001259	6.50
Double iginition electrode	1001650	1001650	1001650	1001651	1001650	21.70
Oil firing device LMO 14	1001607	1001607	1001607	1001607	1001607	86.70
Oil firing device LMO 24	1001577	1001577	1001577	1001577	1001577	132.30
Oil firing device LMO 44 WLE	1001576	1001576	1001576	1001576	1001576	187.50
Oil firing device LMO 64 WLE	1001575	1001575	1001575	1001575	1001575	192.20
Equiment base LOA/LMO	1001596	1001596	1001596	1001596	1001596	14.20
QRC flame guard	1001604	1001604	1001604	1001604	1001604	165.40
Ignition lead	1002180	1002180	1002180	1002180	1002180	8.60
Motor 230 V/50 Hz, 110 W	1001178	1001178	1001178	–	–	190.10
Motor 230 V/50 Hz, 180 W	–	–	–	1001186	1001186	280.90
Coupling	1001170	1001170	1001170	1001170	1001170	3.10
Oil pump	1001231	1001231	1001231	1001231	1001231	100.30
Oil pipe with nipple	1002551	1002551	1002551	1002551	1002551	14.40
Air inlet nozzle	1001698	1001698	1001698	–	–	27.20
Air inlet nozzle	–	–	–	1001711	1001711	28.60
Gasket for air sleeve	1001728	1001728	1001728	–	–	15.10
Gasket for air sleeve	–	–	–	1001729	1001729	15.10
Fan wheel	1001144	1001144	1001144	1001145	1001145	52.20
Burner flange	1000829	1000829	1000829	–	–	29.30
Burner flange	–	–	–	1000878	1000878	50.10
Flange gasket with ceramic fibre gasket	1001733	1001733	1001733	–	–	34.30
Flange gasket	–	–	–	1001734	1001734	36.65
Oil pipe - 1,000 mm, R 3/8´´, 90 °	1001163	1001163	1001163	1001163	1001163	12.90

Spare parts series 5	HVS 5.3 K	HVS 5.3	HVS 5.3 G1	HVS 5.3. G2	HVS 5.3 Ö	Price/€
Baffle plate	1000814	1000814	–	–	–	18.80
Baffle plate	–	–	1000880	–	–	42.20
Baffle plate	–			1000874	–	35.80
Baffle plate	–	–	–	–	1000847	66.50
Flue	1000810	–	–	–	–	37.30
Flue	–	1000813	–	–	–	38.70
Flue	–	–	1000879	1000879	–	53.10
Flue	–	–	–	–	1000897	53.55
Oil pre-heater	1001249	–	–	–	–	150.70
Oil pre-heater with dop stop	–	1001247	1001247	1001247	1001247	147.00
Oil pre-heater	–	1001248	1001248	1001248	1001248	122.85
Iginition transformer EBI	1001261	1001261	1001261	1001261	1001261	45.70
Iginition cable for EBI	1001259	1001259	1001259	1001259	1001259	6.50
Double iginition electrode	1001648	1001648	1001648	1001648	1001648	8.80
Oil firing device LMO 14	1001607	1001607	1001607	1001607	1001607	86.70
Oil firing device LMO 24	1001577	1001577	1001577	1001577	1001577	132.30
Oil firing device LMO 44 WLE	-	1001576	1001576	1001576	1001576	187.50
Oil firing device LMO 64 WLE	1001596	1001596	1001596	1001596	1001596	14.20
Equiment base LOA/LMO	1001569	1001569	1001569	1001569	1001569	21.20
QRC flame guard	1002176	1002176	1002176	1002176	1002176	8.50
Ignition cable with plug	1001177	1001177	1001177	1001177	1001177	189.00
Motor 230 V/50 Hz, 90 W	1001191	1001191	1001191	1001191	1001191	15.10
Capacitor + cap	1001170	1001170	1001170	1001170	1001170	3.10
Coupling without plate	1001231	1001231	1001231	1001231	1001231	100.30
Oil pump Danfos	1002551	1002551	1002551	1002551	1002551	14.40
Oil pipe with nipple	1001123	1001123	1001123	1001123	1001123	6.50
Air choke	1001124	1001124	1001124	1001124	1001124	9.98
Pressure sliding bar	1001137	1001137	1001137	1001137	1001137	50.80
Fan wheel	–	–	1000829	1000829	-	29.30
Burner flange	1000817	1000817	–	–	1000817	27.25
Burner flange	1001719	1001719	1001721	1001721	1001719	10.80
Oil pipe - 1,000 mm, R 3/8´´	1001163	1001163	1001163	1001163	1001163	12.90
Hexagonal Allen wrench	1001423	1001423	1001423	1001423	1001423	3.50
Euro connection 7-pin boiler side	1001695	1001695	1001695	1001695	1001695	8.80
Euro connection 7-pin burner side	1001696	1001696	1001696	1001696	1001696	8.80
Hood anthracite	1001129	1001129	1001129	1001129	1001129	66.50
Sound isolation	1000554	1000554	1000554	1000554	1000554	21.80

Spare parts series HBG	HBG 61	HBG 62	HBG 62 Z	Price/€
Baffle plate	1000814	–	–	18.80
Baffle plate	–	1000894	1000894	62.50
Flue	1000827	-	–	43.80
Flue	–	1000905	1000905	81.85
Oil pre-heater	1001247	–	–	147.00
Oil pre-heater	–	1001356	1001356	111.00
Double iginition electrode	1001648	1001648	1001648	8.80
Oil firing device LMO 14	1001607	1001607	–	86.70
Oil firing device LMO 24	1001577	1001577	1001577	132.30
Oil firing device LMO 44 WLE	1001576	1001576	1001576	187.50
Equiment base LOA/LMO	1001596	1001596	1001596	14.20
QRC flame guard	1001569	1001569	1001569	21.20
Iginition transformer EBI	1001261	1001261	1001261	45.70
Iginition cable for EBI	1001259	1001259	1001259	6.50
Iginition lead	1002176	1002176	1002176	8.50
Motor 230 V/50 Hz, 90 W	1001183	–	–	182.70
Motor 230 V/50 Hz, 100 W incl. cable	–	1001178	–	190.10
Motor 230 V/50 Hz, 180W incl. cable	–	–	1001186	280.90
Capacitor + cap	1001191	1001191	1001191	15.10
Coupling without plate	1001170	1001170	1001170	3.10
Oil pump without cable Danfoss	1001231	1001231	–	100.30
Oil pump	–	–	1001207	258.00
Oil pipe with nipple	1002551	1002551	1002551	14.40
Air choke	1001699	–	–	13.90
Air choke	–	1001712	–	13.90
Air choke metal	–	–	1002566	17.20
Air inlet nozzle	1001698	–	–	27.20
Air inlet nozzle	–	1001711	1001711	28.60
Fan wheel	1001144	–	–	52.20
Fan wheel	–	1001145	1001145	52.20
Burner flange	1000817	–	–	27.25
Burner flange	–	1000829	1000829	29.30
Flange gasket	1001729	–	–	15.10
Flange gasket	–	1001733	1001733	34.30
Oil pipe - 1,000 mm, R 3/8´´ 90°	1001163	1001163	–	12.90
Oil pipe - 1,000 mm, R 3/8´´ 90°	–	–	1001152	12.90
Hexagonal Allen wrench	1001423	1001423	1001423	3.50
Euro connection 7-pin boiler side	1001695	1001695	1001695	8.80
Euro connection 7-pin burner side	1001696	1001696	1001696	8.80
Euro connection 4-pin boiler side	–	1001675	1001675	13.10
Euro connection 4-pin burner side	–	1001676	1001676	15.75
Servo motor	–	1001355	1001355	308.50
Hood black	1001700	1001700	1001700	28.90

Spare parts series 18	HS 18.1 Z	HS 18.2 Z	Price/€
Baffle plate	1000875	–	54.30
Baffle plate	–	1000876	56.20
Flue	1000877	–	55.55
Flue	–	1000881	75.10
Cup-shaped head	–	1000882	144.20
Nozzle holder - complete	1002876	1002876	34.97
Ignition transformer EBI 4	1001261	1001261	45.70
Ignition cable for EBI 4 ignition transformer	1001259	1001259	6.50
Double ignition electrode	1001648	1001648	8.80
Oil firing device LMO 24	1001577	1001577	132.30
Oil firing device LMO 44 WLE	1001576	1001576	187.50
Equipment base LOA / LMO	1001596	1001596	14.20
QRB flame guard	1001569	1001569	21.20
Ignition lead	1002171	1002171	8.50
Motor – 230 V / 50 Hz, 180 W	1001172	1001172	301.90
Capacitor + cap	1001191	1001191	15.10
Coupling	1001170	1001170	3.10
Oil pump Suntec	1001216	1001216	407.40
Oil pipe with nipple	1002551	1002551	14.40
Air choke	1000884	1000884	19.20
Fan wheel	1001142	1001142	46.80
Burner flange	1000878	1000878	50.10
Flange gasket	1001722	1001722	5.10
Oil pipe – 1,000 mm, R 3/8", 90°	1001152	1001152	12.90
Hexagonal Allen wrench	1001423	1001423	3.50
Euro connection 7-pin boiler side	1001695	1001695	8.80
Euro connection 7-pin burner side	1001696	1001696	8.80
Euro connection 4-pin boiler side	1001675	1001675	13.10
Euro connection 4-pin burner side	1001676	1001676	15.75
Servo motor	–	1001355	308.50
Hood, black	1000964	1000964	31.70

Spare parts series 20/30	HS 20 Z	HS 30 Z	Price/€
Baffle plate	1000900	1000900	54.80
Flue	1000832	1000832	200.50
Cup-shaped head	1000831	1000831	176.95
Ignition transformer EBI 4	1001261	1001261	45.70
Ignition lead	1001259	1001259	6.50
Double ignition electrode	1001647	–	14.55
Double ignition electrode	–	1001639	14.95
Oil firing device LOA 24	1001568	1001568	123.80
Oil firing device LMO 14	1001607	1001607	86.70
Oil firing device LMO 24	1001577	1001577	132.30
Oil firing device LMO 44 WLE	1001576	1001576	187.50
Equipment base LOA / LMO	1001596	1001596	14.20
QRB flame guard	1001569	1001569	21.20
Ignition lead	1002171	1002171	8.50
Motor – 230 V / 50 Hz, 180 W	1001179	–	271.50
Motor – 230 V / 50 Hz, 250 W	–	1001185	283.40
Capacitor	1001191	1001191	15.10
Coupling	1001169	1001169	3.50
Oil pump Suntec	1001216	1001216	407.40
Oil pipe with nipple	1002551	1002551	14.40
Air choke	1001131	1001131	10.40
Pressure sliding bar	1001132	1001132	19.95
Fan wheel	1001146	–	47.15
Fan wheel	–	1001143	29.95
Burner flange	1001690	1001690	53.55
Flange gasket	1001723	1001723	16.40
Oil pipe – 1,000 mm, R 3/8"", 90°	1001152	1001152	12.90
Hexagonal Allen wrench	1001423	1001423	3.50
Euro connection 7-pin boiler side	1001695	1001695	8.80
Euro connection 7-pin burner side	1001696	1001696	8.80
Euro connection 4-pin boiler side	1001675	1001675	13.10
Euro connection 4-pin burner side	1001676	1001676	15.75
Servo motor	1001563	–	432.20
Servo motor	–	1001355	308.50
Hood, red	1001136	1001136	119.95

Spare parts series HPM 1	HPM 1.25 E	HPM 1.1 E	Price/€
gas valve - VK 4115	1001309	1001309	164.85
Venturi mixing system	1001312	1001312	62.90
Motor	1002547	1002547	245.70
Burner housing	1002550	1002550	39.40
Double flnage	1000969	1000969	58.30
Combustion head 262 mm	1002548	1002548	151.75
Combustion head 312.2 mm	1002727	1002727	228.40
Gasket for fan	1002732	1002732	6.40
Outer flange gasket	1002734	1002734	5.10
Flue gasket	1002736	1002736	6.40
Gasket iginition electrode	1002740	1002740	3.89
Inner flange gasket	1002744	1002744	8.60
Gasket for Venturi O-ring	1001316	1001316	3.30
O-ring flange/gas valve	1001317	1001317	1.95
Iginition and ionisation electrode	1003722	1003722	39.69
Iginition and ionisation electrode long	1002731	1002731	42.30
gas firing device	1001308	1001308	280.35
Pressure switch	1001307	1001307	63.40
Cable harness HPM 1-stage	1000094	1000094	65.50
Euro connection 7-pin boiler side	1001695	1001695	8.80
Flange Rp 1/2 ´´ angle 90 °	1001305	1001305	16.75
Hood	1001129	1001129	66.50

Spare parts series HSP	HSP 1E/F	Price/€
gas valve - VK 4115	1001309	164.85
Venturi mixing system (HSP 1 E/F - 30 - 70 kW)	1001312	55.80
Venturi mixing system (HSP 1 E/F - 26 - 30 kW)	1001310	55.80
Motor	1002525	512.60
Burner housing	1002747	50.25
Double flnage	1000969	58.30
Combustion head 262 mm	1002548	151.75
Gasket for fan	1002732	6.40
Outer flange gasket	1002734	5.10
Flue gasket	1002736	6.40
Gasket iginition electrode	1002740	3.89
Inner flange gasket	1002744	8.60
Gasket for Venturi O-ring	1001286	8.10
O-ring flange/gas valve	1001317	1.95
Iginition and ionisation electrode	1003722	39.69
gas firing device	1003494	280.35
Pressure switch	1001307	63.40
Cable harness HSP 1-stage	1003449	100.80
Euro connection 7-pin boiler side	1001695	8.80
Flange Rp 1/2 ´´ angle 90 °	1001305	16.75
Hood	1002564	49.70
gas injector (LPG)	1001304	2.25

Spare parts series 22	HSGi 22 E	HSGi 22 EZ	Price/€
Baffle plate	1000925	1000925	34.40
Flue	1000832	1000832	200.50
Cup-shaped head	1000831	1000831	176.95
Ignition transformer	1001262	1001262	58.70
Ignition cable for EBI transformer	1001258	1001258	5.50
Ignition electrode	1001643	1001643	11.30
Ionisation electrode	1001641	1001641	17.96
Ionisation cable	1001646	1001646	10.40
Ignition cable with plug	1002170	1002170	7.90
gas firing device	1001573	1001573	274.60
Equipment base	1001596	1001596	14.20
Motor – 230 V / 50 Hz, 180 W	1001179	1001179	271.50
Capacitor	1001191	1001191	15.10
Differential pressure switch	1001624	1001624	86.50
Mounting flange	1001630	1001630	15.50
Air choke	1001131	1001131	10.40
Pressure sliding bar	1001132	1001132	19.95
Fan wheel	1001146	1001146	47.15
Hose connection	1001635	1001635	14.39
Air pressure hose	1001634	1001634	6.60
MultiBloc – Dungs	1001629	–	Request
MultiBloc – Dungs	–	1001625	Request
MultiBloc – Honeywell VR 432 PB	–	1001297	Request
Burner flange	1001690	1001690	53,55
Flange gasket	1001723	1001723	16.40
Hexagonal screwdriver – 4 mm	1001423	1001423	3.50
Euro connection 7-pin boiler side	1001695	1001695	8.80
Euro connection 7-pin burner side	1001696	1001696	8.80
Euro connection 4-pin boiler side	–	1001675	13.10
Euro connection 4-pin burner side	–	1001676	15.75
Plug gas switch - MultiBloc	1001619	1001619	21.60
Plug solenoid valve – MultiBloc	1001620	1001620	21.60
Flange MultiBloc – R 1"	1001617	1001617	64.80
Flange MultiBloc – R 1 ¼"	1001618	1001618	54.10
Servo motor	–	1001561	635.80
Hood, red	1001135	1001135	124.95

Notes

Please visit our website

www.hansa-heiztechnik.de

Apart from information about us and our company, you will also find everything you need to know about our range of products and our new products.

Come and have a look!

General terms and conditions

1. General All business relationships are based on these terms and conditions of sale, delivery and payment. These terms and conditions take precedence over any arrangements to the contrary which are submitted by the person placing the order.
Differing agreements only apply if expressly agreed in writing. Calculation of the deliveries is based on the prices effective on the day of delivery.
If the prices increase from order confirmation to delivery as a result of increase in costs, our prices valid on the respective delivery date shall apply which orient themselves within the scope of the respective increase in costs. We sell exclusively to resellers so that the provisions governing the sale of consumer goods according to § 474 et seq. German Civil Code do not apply.
Our offers are always subject to change. Every order, whether placed in writing, by telephone or verbally, requires our particular, written confirmation in accordance with the present terms and conditions to become binding for us.

2. Limitation of authority Our contracting representatives are not authorized to modify the following conditions or our offers by means of additional verbal agreements. This must be made in writing. Explanations of our contracting representatives that were made only verbally are not legally binding for us.

3. Terms of payment Subject to deviating written agreements, our invoices are due for payment immediately on receipt of the goods without any deduction to the supplier's payment office without any charges for us. If the customer does not pay on the due date, he shall be liable to pay interests of 8 percent above the basic interest rate p.a. in addition to the invoiced amount.
We reserve the right to claim for higher damage caused by delay. Furthermore all our receivables from this and other business relations with the customer shall become due for payment immediately in full. Cheques and bills of exchange are accepted only as conditional payment and not in lieu of payment. Any complaints will not affect the due date of the purchase price.
The customer shall be entitled to off-set only, if his counterclaims are legally established or undisputed. The customer shall be entitled to exercise a right of retention insofar as his counterclaim relies on the same contractual relationship.

4. Prevention of delivery We shall at all times strive to keep to the agreed delivery deadline. If the sold goods are seized of sovereign actions or force majeure prevent us from delivering, or if it was proven that, through no fault of our own, we were not supplied by our upstream suppliers, we shall be released from our duty to deliver and may postpone the delivery until after the removal of the obstacle. If we exceed the agreed delivery period by more than 14 days, the purchaser has the right to grant us a grace period of 14 days in writing. After the expiry of these 14 days the customer is entitled to cancel the purchase agreement. The resignation, however, is not effective if the goods are already on their way at the time of receiving the resignation. Further claims cannot be asserted as the result of an exceedance of the agreed delivery period.
If the customer is in default of acceptance or otherwise infringes other duties to cooperate, we are entitled to claim arising damages, including possible additional expenses. We reserve the right to make further claims. Provided that the aforesaid conditions exist, the risk of accidental loss or accidental deterioration of the sales item is passed to the purchaser at the time when the default of acceptance or payment default took place.

5. Retention of title We reserve ownership of the supplied goods until payment of the purchase price including all ancillary claims, as well as claims from other business relations with the customer or from any other legal title against the customer. If the customer resells the goods before complete payment is effected, he already assigns the claim from the resale to us in this case.
If the goods are sold together with other objects at a total price, the portion of the total claim corresponding to all our outstanding claims against the buyer is ceded to us.
The customer undertakes neither to encumber the goods subject to the reservation of ownership with third parties rights, nor pass title to a third party for security prior to complete payment of all debts. The customer undertakes to immediately inform us if the goods are seized by third parties of if they assert other rights. If necessary, the customer will provide us with the information required to safeguard our rights and to leave his documents in trust. All intervention costs are to be borne by the customer in any case. We are entitled to deduct up to 20% from the invoiced value for goods taken back. In addition, the customer is fully liable for any kind of depreciation that the goods suffered while in his possession.

6. Transfer of risk The goods are always transported at the risk of the customer ex works or warehouse Rhade to the place of destination. This also applies when we deliver carriage paid.

7. Guarantee If complaints are not excluded as a result that the customer has inspected the goods prior to shipment, we shall be liable for defects of the delivered goods among which also includes the absence of warranted properties.
Complaints have to be lodged by the customer in writing within 14 days after receipt of the goods at the place of destination. The non-conforming goods have to be sent to us within the same period carriage paid. It will be sent by us to the upstream supplier for the execution of warranty works and after completion of the warranty works it will be returned to the sender. The customer has the right to rescind the contract after two unsuccessful rectification attempts. Further rights, particularly the right to reduction are excluded. As a reseller, the customer shall be entitled to a trade discount on all goods ordered and in return he shall renounce his rights according to § 478 Abs. 2 BGB (German Civil Code) for reimbursement of the expenses he had to bear in the business relation with his customer for subsequent performance in relation to consumers according to § 439 Abs. 2 BGB (German Civil Code). This discount represents an equivalent compensation within the meaning of § 478 Abs. 4 BGB (German Civil Code). We provide a warranty for the goods delivered by us, in the state we received them from our upstream supplier, for any damage to material or manufacturing defects.
The warranty period is 24 months ex works, however provided a perfect, proper installation and maintenance at the prescribed intervals. The customer shall not be entitled to reduction. He shall also not be entitled to any claims for rescission or damages due to the defect. Our warranty shall become void, if the customer or a third party has made modifications or repairs to the item in dispute without our prior consent. The warranty claims based on the foregoing shall expire in one year from the date of receiving the goods at the place of destination. The foregoing provisions shall also apply in case different goods from the agreed were supplied.

8. Place of jurisdiction Place of performance and jurisdiction for all legal disputes arising from this contract is Bremervörde for both contractual parties, provided that the contractual parties are merchants or legal entities of public law or if the other contractual party has its usual place of residence outside the Federal Republic of Germany. This also applies to actions in proceedings regarding bills of exchange or cheques insofar as no other explicit agreement has been made in writing. The contractual terms and the business relationship are subject entirely to the law of the Federal Republic of Germany.

9. Other All agreements made between us and the customer with regard to the execution of this contract have been made in writing in this contract. Claims arising from the impossibility of performance, default on conclusion of the contract, positive breech of contract as well as tortious acts are excluded insofar as this is legally permissible. No claims can be asserted against us following advice. In the event that individual provisions of this contract should be invalid or become invalid or contain a loophole, the remaining provisions shall remain unaffected. We undertake for substitution of this invalid provision to agree on a legally permissible provision which comes closest to the economic purpose of the ineffective provision respectively fills the loophole.
We reserve the right to change the General Terms and Conditions. In this event, each contractual party will be informed about the amended General Terms and Conditions. The amendment shall be deemed accepted by the contractual partner if he does not object to it within one week after receipt or after his first possibility of becoming aware of the same.

2019/03/A1

HANSA
HEIZTECHNIK
Hansa Öl- und Gasbrenner GmbH

Hansa oil- und gas burners GmbH | Burgdamm 3 | D-27404 Rhade
Telefon: +49 (0) 42 85 93 07-0 | Fax: +49 (0) 42 85 93 07-30
info@hansa-heiztechnik.de | www.hansa-heiztechnik.de